Guiding Visually Challenged Using Raspberry Pi

With Standard Ethernet, You Can Re-Flash the Car in Minutes Compared to Hours

ShopSecure: An IoT Security System

₹ 100

MARCH 2014

# electronics FOR YOU PLUS

SOUTH ASIA'S MOST POPULAR ELECTRONICS MAGAZINE

## HOW TO SELECT A 3D PRINTER

## TOP 5 DO-IT-YOURSELF

- Medicine-Time Reminder
- Thermoelectric Refrigerator
- RJ45 Cable Tester
- Simple Manual PWM Controller
- Locker-Security Alarm

Plus, many more make-your-own projects inside

## Automotive Electronics Special

Smart and Sustainable Cars: Racing into the Future

Automobiles with Vision: What We Can Look Forward to

Industry Report: Automotive Electronics: Shifting Gears

Career: Automotive Electronics Industry Looks Good

An EFYGROUP Publication
Vol. 2 No. 11
ISSN 0013-516X
Pages: 150+8 | UK #5; US $10

# Agilent@DGS&D
# General Purpose | Digital | RF | Microwave

One Stop Solution for all your T&M Needs


Agilent Technologies

| | | | |
|---|---|---|---|
| RF Signal Generator<br>Analog: 3, 6, 20, 40 GHz<br>Vector: 6 GHz | Logic Analyzer<br>34 Ch, 68 Ch, 102 Ch and 136 Ch | Benchtop Digital Multimeter (6.5 Digit) | Programmable DC Power Supply 15/30 V, 7/4 A |
| Arbitrary Waveform Generator<br>30 MHz (1Ch), 30 MHz (2Ch) | Vector Signal Analyzer Software<br>89600A (VSA) | Handheld Digital Multimeter (3.5 & 4.5 Digit) & Handheld Clamp Meter | Spectrum Analyzer CXA/EXA Series with EMC 3,7.5,13,26.5,44 GHz |
| Vector Network Analyzer<br>N9913A, N9914A – Field Fox | Digital Storage Oscilloscope (2 Ch/4 Ch)<br>BW: 100, 200, 300, 500 MHz, 1 GHz (2Ch/4Ch)<br>(coming soon) | | |
| Signal Analyzer (PXA/MXA Series)<br>3, 8, 13.6 & 26.5 GHz | Mixed Signal Oscilloscopes, 100 MHz to 1GHz<br>Probes & Accessories (coming soon) | Frequency Counter 6 GHz | HH Spectrum Analyzer<br>N9342C - 7 GHz<br>N9344C - 20 GHz |

**For more information, Call: 1800 11 2929 (toll free), 0124 229 2009 or email: tm_india@agilent.com**

**Our Network:**

**Andhra Pradesh :** Synergy Measurement Technologies Pvt. Ltd., 040 4444 4040 vincent@synergytech.in, **(RCI-DRDO)** Sai Micr
**Chhattisgarh, Gujarat & Madhya Pradesh :** Automation System Engineers Pvt. Ltd., 079 2646 7827 shaunak@asepl.in ; **East &**
Tech Systems Pvt. Ltd., 080 2350 6121 arvind@arts.net.in ; **Kerala :** Innovative Instruments Inc., 0471 2316 385 babu@innovative
India Pvt. Ltd., 011 4306 4306 aka@agmatel.com ; **Tamil Nadu :** Synergy Measurement Technologies Pvt. Ltd., 044 2654 0919 sw

***Anticipate ___Accelerate ___Achieve***

# Agilent and Academia

Committed to help you teach the Engineers of tomorrow

## One Stop Solution

**Agilent Education Solution Kits**

- RF/MIC kit (Jointly developed by FIIT (IIT Delhi) and Agilent Technologies)
- Embedded System Design (ARM®9) Teaching Lab
- Antenna & Propagation Teaching Lab
- Electronic Instrumentation & Measurement Solutions
- Virtual Instrument Lab Station
- Microcontroller System Design Teaching Lab (8051)
- Digital Signal Processing Teaching Lab
- Analog Electronics Teaching Lab
- Digital RF Communications Teaching Lab
- Digital Systems Teaching Lab
- Digital IQ Modulation Teaching Lab
- RF Circuit Design Teaching Lab
- Multipurpose Teaching Lab

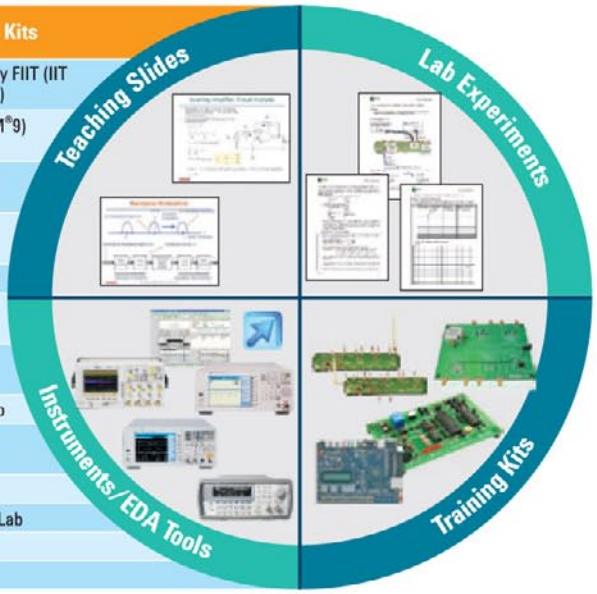


## Economy Multipurpose Lab Station

PRICED UNDER ₹ 1 LAC*

3 YEAR STANDARD WARRANTY

**Agilent's solution for a complete lab setup at a price you cannot refuse!**

**An integrated system comprising - Oscilloscope, Function Generator, Multimeter, Power Supply, VEE Software, Training kit & Courseware**

**Measure different parameters >> View, Capture, Edit and Generate custom signals >> Configure, Customize and Automate measurements >> Explore entire functionality of individual subsystems**

## Economy Oscilloscopes Redefined.

**InfiniiVision 2000 X-Series**

**70/100/200 MHz**
**2 GSa/s Sample Rate**
**2 or 4 Analog + 8 Digital Channels**
**100 kpts std, New 1 mpts option**
**New serial decode options**
**I2C, SPI, CAN, LIN, RS232, UART**
**New 5-year warranty**


Only for Education Customers

**FREE**

- Inbuilt 20MHz Function Generator.
- DSOXEDK Educators Training Kit.
- DSOXDVM Integrated 3 Digit Digital Voltmeter (DVM).



* All prices are in INR and subject to change

Experience the latest range of Agilent's T&M products at **Booth No 3093** automotive testing expo 2014 INDIA 19, 20, 21 MARCH 2014 CHENNAI

rosystems Pvt Ltd., 09849171355 sales@Saimicro.Com, RKe Technologies **(Vishakhaptnam)**, 0891 2793 176 prakash@rketech.com ; **North East India :** Synergy Measurement Technologies Pvt. Ltd., 033 2417 4322 debashis@synergytech.in ; **Karnataka :** Applied Real einc.in ; **Maharashtra :** Synergy Measurement Technologies Pvt. Ltd., 020 2546 8459 waman@synergytech.in ; **North India :** Agmatel ami@synergytech.in ; **Western India (Naval Accounts) :** Shubh Enterprises, 022 2284 4954 pallav@shubhent.com

**Agilent Technologies**

# contents

ELECTRONICS FOR YOU PLUS | MARCH 2014 | VOL. 2 NO. 11







## Hands-On



## Regulars



## EFY Plus DVD



**NEXT ISSUE** • Smart Homes • Inverters & UPS–SOHO & Industrial • Digital Multimeters

EDITOR : Ramesh Chopra

EDITORIAL CORRESPONDENCE : Editorial Secretary
Phone: 011-26810601; E-mail: editsec@efyindia.com
(Technical queries: efylab@efyindia.com)

SUBSCRIPTIONS & MISSING ISSUES : Phone: 011-26810601 or 02 or 03
E-mail: support@efyindia.com

BACK ISSUES, BOOKS, CDs, PCBs etc. : Kits'n'Spares, New Delhi
Phone: 011-26371661, 26371662
E-mail: info@kitsnspares.com

EXCLUSIVE NEWSSTAND DISTRIBUTOR : IBH Books & Magazine Distributors Ltd, Mumbai
Phone: 022-40497401, 40497402, 40497474, 40497413; Fax: 40497434
E-mail: circulations@ibhworld.com

ADVERTISEMENTS NEW DELHI (HEAD OFFICE) : Ph: 011-26810601 or 02 or 03
E-mail: efyenq@efyindia.com

MUMBAI : Ph: 022-24950047, 24928520
E-mail: efymum@efyindia.com

BENGALURU : Ph: 080-25260394, 25260023
E-mail: efyblr@efyindia.com

CHENNAI : Ph: 09916390422
E-mail: efyenq@efyindia.com

HYDERABAD : Ph: 09916390422
E-mail: efyenq@efyindia.com

KOLKATA : Ph: 08800094202
E-mail: efyenq@efyindia.com

PUNE : Ph: 09223232006
E-mail: efypune@efyindia.com

GUJARAT : Ph: 09821267855
E-mail: efyahd@efyindia.com

CHINA : Power Pioneer Group Inc.
Ph: (86 755) 83729797, (86) 13923802595
E-mail: terryqin@powerpioneergroup.com

JAPAN : Tandem Inc., Ph: 81-3-3541-4166

SINGAPORE : Publicitas Singapore Pte Ltd
Ph: +65-6836 2272
E-mail: singapore@publicitas.com

TAIWAN : J.K. Media, Ph: 886-2-87726780 ext. 10

UNITED STATES : E & Tech Media
Ph: +1 860 536 6677
E-mail: veroniquelamarque@gmail.com

Printed, published and owned by Ramesh Chopra. Printed at Nutech Photolithographers, B-38, Okhla Industrial Area, Phase-1, New Delhi, on the first day of each month and published from D-87/1, Okhla Industrial Area, Phase-1, New Delhi 110020. 

# KWK RESISTORS India

India's leading manufacturer of Power Resistors.

## Popular products

### KHA series – Aluminum Housed Resistors

High performance Molded Power resistors for virtually any resistive application.

### KABR series – Metal Clad Braking Resistors

Designed for high peak power applications. Ideal as Braking resistors.

### KSA series – General Industrial Silicon coated Resistors

High performance general purpose Silicon coated Wire wound Power Resistors.

### Custom Resistors

With Custom resistors forming as much as 40% of our sales, we can make resistors of any shape, power and terminations! Contact us for further details

KWK Resistors India is formed out of a Joint Venture between the well-known resistor manufacturer - K S Instruments Pvt Ltd, and two of Europe's leading resistor manufacturer - Krah Group and Widap. The team involved have over 40 years of experience designing and manufacturing resistors for Industrial, Medical, Aerospace, Automotive, Transit and all other applications that require the best Power Resistors.

With offices in Bangalore, Pune and a Distributor network growing all the time, we can service your resistive requirements promptly!

## Resistors for a wide range of applications:

General Purpose Resistors

Variable Resistors

Braking Resistors

Custom Built Resistive Loadbanks

**KWK Resistors India Private Limited,** Bangalore, India.

www.kwk-resistors.in

# Simmtronics Unleashes Android Tablet XPAD Turbo

**Runs on Android 4.2.2 Jelly Bean OS**

The demand for small tablets, with the screen size of 17.7cm (7-inch), seems to be warming up again. After Oplus venturing with its XonPad7 in India, the home-grown manufacturer Simmtronics announced the launch of XPAD Turbo Android tablet. The device is available across the nation at a reasonable price.

This tablet packs a 17.7cm (7-inch) 1024×600p display and runs on Android 4.2.2 Jelly Bean OS. It is powered by a 1.2GHz dual-core processor and offers dual-SIM support. The tablet sports a 2MP rear camera, VGA front camera, 2800mAh battery, 512MB of RAM and 4GB of internal storage. It also has a microSD card slot, 3G support, Wi-Fi, Bluetooth and FM radio.

**Price:** ₹ 7999


# Lenovo Introduces Super-Sleek Vibe Z Smartphone

**Powered by blazingly fast and power-efficient Qualcomm Snapdragon 800 processor**

The much-awaited Lenovo Vibe Z, the latest addition to the premium Lenovo Vibe series of smartphones, is an ideal combination of striking looks, exquisite design, captivating performance and cutting-edge technology to help you do more in lesser time.

Equipped with high-speed LTE (4G) connectivity, astoundingly fast processor, advanced cameras and brilliant 13.9cm (5.5-inch) 20/20 vision display, Vibe Z is just the right choice for people who want the best of everything, be it work or play.

Proud winner of 'CRN 10 Show-Stopping Smartphones' category at CES 2014, Vibe Z's ultra-light, super-sleek form factor is certainly a head-turner. With a thickness of 7.9mm and weighing just 147gm, Vibe Z is ultra-light for a 13.9cm (5.5-inch) display smartphone and certainly has the looks to die for coupled with advanced features.


**Price:** ₹ 35,999

Promising supreme efficiency, Vibe Z packs Qualcomm Snapdragon 800 quad-core processor that helps you run all your apps and multi-task at a flashing speed of 2.2GHz. The Vibe Z smartphone is available across the country through Lenovo Exclusive Stores (LES), leading multi-brand outlets and thedostore.com.

# ASUS Launches M70AD—The World's First NFC-Enabled Desktop PC In India

**Powered by fourth-generation Intel Core processor**

ASUS has launched M70AD desktop PC with latest fourth-generation Intel Core processor for improved performance and graphics for the most demanding tasks, and near field communication (NFC) technology for wireless pairing with Android-based devices.

The M70AD allows users to log onto the PC and launch applications via NFC, while photos in mobile devices can also be backed up wirelessly with a simple tap.

ASUS M70AD features Sonic Master Technology, which together with MaxxAudio from Waves, recipient of a Technical GRAMMY Award, provides users with immersive and impactful audio.


**Price:** ₹ 62,000

The M70AD can also charge mobile devices wirelessly, while its built-in UPS acts as a power supply for the PC in the event of a power outage.

# Micromax Introduces Dual SIM Smartphone Canvas Duet II

**Powered by quad-core 1.2GHz mobile processor**

Micromax has quietly introduced the new Canvas Duet II, a dual-SIM smartphone with one GSM and one CDMA SIM.

The Canvas Duet II features a 13.4cm (5.3-inch) HD display with a quad-core 1.2GHz mobile processor. The smartphone is likely to be available across all retail stores in the country by now.

Micromax Canvas Duet II is the successor model of the Canvas Duet smartphone. Duet II supports 1280x720 pixel resolution. The smartphone maker has powered the handset with a quad-core 1.2GHz mobile processor and 1GB RAM. It has 4GB on-board storage and a memory card slot, which allows expansion of up to 32GB via micro SD card. The smartphone runs on Android 4.1 Jelly Bean update.

**Price:** ₹ 15,790

# SanDisk Announces Premium, High-Performance USB 3.0 Flash Drive

**Having write speeds up to 240Mbps**

SanDisk Corporation has announced the Extreme PRO USB 3.0 Flash drive, featuring professional-grade performance with some of the fastest speeds in the industry at up to 60 times faster than standard USB 2.0 drives and providing a generous 128GB of storage. This USB Flash drive offers world-class performance for technology aficionados who demand high speed, durability and peace of mind that their files will be safe.


**Price:** ₹ 16,388

It takes advantage of the next-generation specification by providing write speeds up to 240Mbps and read speeds up to 260Mbps. This speed allows users to transfer a full-length movie in seconds, or 1000 high-resolution photographs in less than 35 seconds, making it ideal for carrying videos and photos.

It offers a sophisticated and durable aluminium metal casing, which protects against everyday wear and tear. SanDisk SecureAccess software is also included, which provides 128-bit AES file encryption and password protection to secure private files while leaving the rest of the drive visible for sharing. It is available worldwide now and on www.sandisk.com in a 128GB capacity. Additionally, the drive is backed with a lifetime limited warranty and world-class customer support.

# iBall Unveils Tarang F5 5.1 Multimedia Speakers

**With full wooden cabinets that blend well with your home decor**

iBall has unveiled its latest 5.1 multimedia speakers, Tarang F5. The speakers promise to astound the users with their dynamic looks and superb stereo sound, building an immersive home theatre sound experience.

iBall is one of the pioneers in multi-media speaker range to focus on full-wood speakers. Its Tarang series is one of the most famous and well-appreciated range. The speakers are housed in full wooden cabinets to blend well in styling with modern computers and home decor. The satellite speakers as well as the woofer deliver superb sound quality with high-power output to draw the listeners into the centre of the ongoing action.

To enhance the entertainment experience, the speakers support multiple input options such as 2.1 and 5.1 giving you complete freedom to connect them to a DVD, PC or TV. They also have a USB slot, SD/MMC which enables the user to listen to their favourite music anytime.

**Price:** ₹ 5799

# YOUR NEED
# OUR SOLUTIONS







## LINE CARD:

NationalChip, Littelfuse, FAIRCHILD SEMICONDUCTOR, AVX, Melexis, QUECTEL, nuvoTon, Digi, SPANSION, HAMLIN, Electronic Corporation, PIC, SWITRONIC, UCHIYA, UTC, SAMWHA, HYPERTAC, 升谱光电 SUNPU LED, Ucon, AEC, ap, SHARP, ETR, Etron 钰创科技 Etron Technology, Inc., LS, NCR, WAY-ON, ASJ, UEI, CYGWAYON, KDS DAISHINKU CORP., HONGFA RELAY

# MILLENNIUM SEMICONDUCTORS

**Corporate Office :** 17/18/1,2nd floor Mahalaxmi heights, Mumbai- Pune Road, Pimpri Pune- 411018 Maharashtra INDIA.
Tel. 91-20-27484800, 27484900/ 27485000 Mob : 9822044422, Email: millenniumsemi@vsnl.net

**Delhi Office :**
202,2nd floor gupta Towers II, Near PVR Cinema, Vikaspuri new Delhi-110018,
Email : info@millenniumsemi.com
Tel: - 011 45545192 / 28541964 / 65.
Mob No:- +91- 9650005683

**Bangalore Office :**
705 ford Tower, Old Airport Road, Kodihalli, Bangalore- Pin Code: 560008.
Email Id : info@millenniumsemi.com
Mob No :- +91-9740911522

**Hyderabad** : E-mail : info@millenniumsemi.com
Mob No.:- +91- 9700032233

**Ahmedabad** : E-mail : info@millenniumsemi.com
Mob No.:- +91- 9723442982

**Nashik** : Email ID: info@millenniumsemi.com
Mob No.:- +91-9657715096

**Chennai** : E-mail : info@millenniumsemi.com
Mob No.:- +91- 9500043113



**www.millenniumsemi.com**

## GizMo ByTes

### Nokia X Coming to India Around IPL

Nokia has reportedly started shipping the new Nokia X smartphone to app developers in India. The company is likely to launch the phone around the upcoming IPL season in early April in the Indian market. The new smartphone is code-named as Normandy and runs the AOSP version of Android. This version of Android in the Nokia phone does not have any Google service. Therefore the company is developing its own separate app store for the platform.

### Ubuntu 14.04 Brings Back Local Menus

In Ubuntu 14.04 users will be able to choose whether or not they want application menus to appear globally or locally. It has been a long time coming, but finally it is here much to the relief of users. Canonical has now come up with a replacement for the much-criticised global menu bar. Prepare for the re-emergence of locally integrated menus.

### Moto G Gets Android 4.4 KitKat Update in India

As promised, the Motorola Moto G is now getting an Android 4.4 aka KitKat update in India. The 230.7MB update on the 16GB version of the Moto G will bring Google's latest mobile operating system to it. This update includes a new phone dialer app. It integrates SMS and MMS capabilities with the Google Hangouts apps. The smartphone sports an 11.43cm (4.5-inch) screen with a 720p resolution and is powered by a Snapdragon 400 quad-core processor running at 1.2GHz.

### Xiaomi All Set to Enter India

The Chinese smartphone vendor, Xiaomi, is reportedly looking for partners to launch its smartphones in India. It is already in talks with multiple content providers in the country. Xiaomi sold 19 million smartphones in China, Taiwan and Hong Kong in one-year span of last year.

# Binatone Launches Advanced Digital Baby Monitors

**Offers parents ultimate peace of mind whether they are at home or on the go**

Binatone has launched new baby monitors in three different variants—Motorola digital audio baby monitor, Motorola digital video baby monitor and Motorola Blink 1 remote digital video baby monitor. The innovative baby monitors are designed for today's tech-savvy parents, making it easy for them to keep their baby safe and secure.

The new baby monitors are currently available at major baby product stores including all Mom&Me and Mothercare stores.

The top-end variant Motorola Blink 1 Wi-Fi digital video baby monitor integrates a microphone, a motion detector and a room temperature sensor. It can work with your smartphone, tablet or computer and uses an app to sync to your devices. The wireless camera has remote pan, tilt and zoom.

It also offers night vision, plays lullabies to soothe your baby and lets you take snapshots and record video. You can watch real-time video with up to 25 frames-per-second video playback. Its standard features include video recording, multi-level zoom, night vision, image snapshot, wireless network compatibility, MJPEG video compression, temperature reading and digital zoom.

**Price:** ₹ 4990 to ₹ 15,990


# Infibeam Adds Powerful 3G Tablet Videocon VT 71

**Powered by 1.2GHz processor**

Online retailer Infibeam.com has added the latest Videocon VT 71 3G Wi-Fi tablet to its store, which comes with a 17.78cm (7-inch) capacitive touch screen that gives you a display resolution of 480x800 pixels. It is based on Android 4.0 ICS OS and is powered by a 1.2GHz processor which enhances the overall performance and speed of the tablet. It has been fitted with a 0.3MP front camera that allows you to make video calls and stay in touch with your friends and loved ones wherever you go.

It has various connectivity features such as Wi-Fi, 3G, HDMI and USB, which allow you to connect to your family and share files with ease.

It comes with 4GB internal memory and 512MB RAM. You can expand the memory up to 32GB via micro-SD card. It runs on a powerful battery that keeps you on all day long.

**Price:** ₹ 4690

# Looking to Buy a Low-Cost Laptop? Chromebook could be a Perfect Choice

Forget about the regular PCs and laptops, even the MacBooks could not survive the Chromebook onslaught. Such is the magic of these Google machines. Like Android, Chromebooks have plenty of options. One finds some really interesting choices in the range of Chromebooks. Although these Google laptops have recently ventured into the Indian market, they seem to have already made their mark in the international market

**DIKSHA GUPTA**


Chromebooks are low-cost laptops that offer a rather refreshing and enjoyable experience. Google is promoting its Chromebooks as "a new type of computer with everything built-in. For everyone. Starting $199." Chromebooks are definitely the latest breed of laptops and are here to stay. These low-cost laptops were first announced in 2010 and started emerging in 2011 as the web-centric alternatives to the traditional laptops.

## What is a Chromebook

Google defines Chromebooks as "a new type of computer designed to help you get things done faster and easier. They run Chrome OS, an operating system that has multiple layers of security, cloud storage and the most popular Google products built-in." Chrome OS has the Linux kernel as its base and the Google Chrome Web browser serves as the interface which allows users to access files and run Chrome Web apps.

Chromebooks can be used best only when connected to the Internet, unlike the traditional laptops. And you do not have to work on traditional software if you are a Chromebook user. For instance, for anything to be done on Microsoft office, Chromebook users resort to Google Docs and save them in Google Drive.

It is not that you cannot work on a Chromebook offline, you just need to pick the right apps for that. Google highlights the apps that can be used offline from the Chrome Web Store itself.

## Advantages of buying a Chromebook

Chromebooks are for those looking for a basic, trendy computer, while saving on their credit card bills. There are many advantages of buying a Chromebook.

Number one and really the most important one is its cost effectiveness. Chromebooks are super cheap as compared to a Windows laptop. They are available for as low as ₹ 22,999. At this price, you can find a Windows laptop but surely of a very low configuration as compared to the svelte MacBook Air

### SOME CHROMEBOOKS TO CHOOSE FROM

| Acer C720 | HP Chromebook 14 | Samsung Chromebook |
|---|---|---|
|  |  |  |
| Price: Starting at ₹ 22,999 | Price: Starting at ₹ 26,990 | Price: Starting at ₹ 26,990 |
| ➤ 29.464cm (11.6-inch) 1366 x 768 display, 16:9 aspect ratio<br>➤ 19mm thin – 2.76lbs/1.25kg<br>➤ Up to 8.5 hours of active use<br>➤ New Intel Processor<br>➤ 100GB Google Drive Cloud Storage2 with 16GB Solid State Drive<br>➤ Built-in dual-band Wi-Fi 802.11 a/b/g/n, 3G modem (opt)<br>➤ VGA camera<br>➤ 1 x USB 3.0, 1 x USB 2.0<br>➤ Full-size HDMI Port<br>➤ Bluetooth 4.0 compatible | ➤ 35.56cm (14-inch), 200-nit display with 16:9 aspect ratio<br>➤ 20mm thin – 4.08lbs/1.85kg<br>➤ Up to 9.5 hours of active use<br>➤ New Intel Processor<br>➤ 100GB Google Drive Cloud Storage2 with 16GB Solid State Drive<br>➤ Built-in dual-band Wi-Fi 802.11 a/b/g/n, 3G modem (opt)<br>➤ HP TrueVision HD webcam<br>➤ 2 x USB 3.0, 1 x USB 2.0<br>➤ Full-size HDMI port<br>➤ Bluetooth 4.0 compatible | ➤ 29.464cm (11.6-inch) (1366x768) display<br>➤ 17.5mm thin – 1.1kg<br>➤ Over 6.5 hours of battery<br>➤ Samsung Exynos 5 dual processor<br>➤ 100GB Google Drive Cloud Storage2 with 16GB Solid State Drive<br>➤ Built-in dual-band Wi-Fi 802.11 a/b/g/n, 3G modem (opt)<br>➤ VGA camera<br>➤ 1 x USB 3.0, 1 x USB 2.0<br>➤ HDMI port<br>➤ Bluetooth 3.0 compatible |

like Chromebook. Of course, do not even think of getting a MacBook Air at this price.

Second biggest advantage of getting a Chromebook is that you can start working on it almost instantly. You just need to turn it on, log onto your Google account, get on with your bookmarks and extensions and get going with your Chromebook. You cannot get the same pleasure even on your iPad and Nexus 7, because both the devices will run the mobile version of Chrome and you will not be able to access your extensions there.

Chromebooks can be switched on in less than 10 seconds. These are full-fledged laptops, with proper keyboards and built-in video chat cameras. They can support many USB devices. Some of the Chromebooks also have an HDMI port along with a Secure Digital memory card for expandable storage facility. Also, other users can comfortably use your Chromebook without peeping into your account, yet signing into their separate accounts.

Another advantage that Chromebooks bring along is their regular software updates. Chromebooks update themselves regularly. Google states that the multi-layer security it has rendered to Chrome OS almost eliminates the need of an additional anti-virus, which is a cost-saving area.

## Disadvantages of buying a Chromebook

Users of Chromebooks need to be very well planned for using their device smoothly on the go. If you are boarding a flight for a long journey, you can use your Chromebook even without a Wi-Fi connection provided you store the files in Google Drive beforehand and enable the offline mode of the drive too. You also have to perform an offline sync before boarding the flight. Alternately, you can use an SD card to store all your data and use it with your Chromebook while you are travelling.

For all those working on a specialised software or technology, Chromebooks are surely not for them. Like a heavy photoshop user cannot resort to a Chromebook. Yes, there are many image-editing apps in the Chrome web apps collection, but it can eventually be a frustrating experience for someone looking for extensive usage of the editing technology.

## Factors to look for while buying a Chromebook:

***Cost.*** Since Chromebooks are cost-friendly and affordable, you can look for a variety of models available in the basic range. But you can buy an 'all-around' Chromebook experience at a higher cost (US$ 1300) with Chromebook Pixel. Chromebook Pixel has the Chrome OS at its best and sports a high-end hardware. With its luxurious design and 4.3-million-pixel touch-enabled display, Chromebook Pixel is surely a user's delight.

***Design and build quality.*** Almost all the Chromebooks offer the same kind of features, barring the design and build quality. Some companies offering Chromebooks have worked extensively on coming up with a sleek and minimalist design. HP Chromebook 11 is one such example of a sleek device. The build quality is also something that you should pay much stress on.

***Performance levels.*** If you are looking for high-level performance, go for a powerful variant of the device. Of course, you cannot match the power levels of Chromebook Pixel at a reasonable price, but there are some high-end models available for you to explore.

Chromebooks with 4GB RAM and new-age chipsets (such as Haswell-based ones) are available in the market, which offer better performance than the entry-level systems. The entry-level Chromebooks provide very basic computing needs. However, the power Chromebooks could be a bit bulky and heavy, as compared to their sleek siblings, but who minds if they are truly worth the money. ●

*The author is a senior assistant editor at EFY*

**EFY Group** Presents

# FESTIVE BONANZA

## GET GIFTS.
## ENJOY DISCOUNTS.
## GAIN KNOWLEDGE.

**Free e-zine** Access With Every Subscription

**OPTION 1**

**Get Assured Gifts with every Subscription**

**OPTION 2**

**50% OFF**

**Upto 50% Discount**

**Microwaveable Foodgrade Lunch Box**

**Soldering Kit**

**Digital Multimeter**

**Mango Pi T-shirt**

Two-In-One Rectangle Alarm Clock

Weather station with LCD Clock

7 Segment Module

MangoPi (PIC Development Board)

ADC Module

Arduino & Mango Pi Based Wireless Steering Robot

Terms:- # These rates are applicable for new subscribers as well as renewal by existing subscribers. # Gift items' photos are indicative only # The rates are valid for subscribers within India only. # Please allow 4-6 weeks for processing of your subscription. # Disputes, if any, are subject to exclusive jurisdiction of competent courts and forums in Delhi/New Delhi only. * Replacement will be made if intimation of damaged / non-receipt of copies is received within 30 days of its publication ** After three months, if you are not satisfied with the magazine, your balance amount will be returned

# FESTIVE SPECIAL

## SUBSCRIBE TO YOUR FAVOURITE MAGAZINES NOW!


TEAR OUT ✂ **ORDER FORM** ✂ TEAR OUT

### Option 1: Gift Scheme

| Magazine | Period | Issues | Cover Price (₹) | You Pay (₹) | You Save (₹) | Discount (%) | Free Gifts | | Free DIY Kits |
|---|---|---|---|---|---|---|---|---|---|
| Electronics For You | 1 Year | 12 | 600 | 510 ☐ | 90 | 15% | ☐ Microwaveable Foodgrade Lunch Box | OR | ☐ Soldering Kit |
| | 2 Years | 24 | 1200 | 960 ☐ | 240 | 20% | ☐ Two-In-One Rectangle Alarm Clock | OR | ☐ Digital Multimeter |
| | 3 Years | 36 | 1800 | 1350 ☐ | 450 | 25% | ☐ Weather station with LCD Clock | OR | ☐ Mango Pi T-shirt |
| | 5 Years | 60 | 3000 | 1500 ☐ | 1500 | 50% | ☐ Discount Rs. 1500 (50%) | OR | ☐ MangoPi (Platinum) |
| Electronics Bazaar | 1 Year | 12 | 1200 | 1010 ☐ | 190 | 15% | ☐ Microwaveable Foodgrade Lunch Box | OR | ☐ Mango Pi T-shirt |
| | 2 Years | 24 | 2400 | 1910 ☐ | 490 | 20% | ☐ Two-In-One Rectangle Alarm Clock | OR | ☐ Soldering Kit with Digital Multimeter |
| | 3 Years | 36 | 3600 | 2690 ☐ | 910 | 25% | ☐ Weather station with LCD Clock | OR | ☐ 7 Segment & ADC Module |
| | 5 Years | 60 | 6000 | 2990 ☐ | 3010 | 50% | ☐ Discount Rs. 3000 (50%) | OR | ☐ Arduino & Mango Pi Based Wireless Steering Robot |
| OpenSource For You (with CD/DVD) | 1 Year | 12 | 1200 | 1020 ☐ | 180 | 15% | ☐ Microwaveable Foodgrade Lunch Box | OR | ☐ Mango Pi T-shirt |
| | 2 Years | 24 | 2400 | 1920 ☐ | 480 | 20% | ☐ Two-In-One Rectangle Alarm Clock | OR | ☐ Soldering Kit with Digital Multimeter |
| | 3 Years | 36 | 3600 | 2700 ☐ | 900 | 25% | ☐ Weather station with LCD Clock | OR | ☐ 7 Segment & ADC Module |
| | 5 Years | 60 | 6000 | 3000 ☐ | 3000 | 50% | ☐ Discount Rs. 3000 (50%) | OR | ☐ Arduino & Mango Pi Based Wireless Steering Robot |
| Facts For You | 1 Year | 12 | 1200 | 1020 ☐ | 180 | 15% | ☐ Microwaveable Foodgrade Lunch Box | OR | ☐ Mango Pi T-shirt |
| | 2 Years | 24 | 2400 | 1920 ☐ | 480 | 20% | ☐ Two-In-One Rectangle Alarm Clock | OR | ☐ Soldering Kit with Digital Multimeter |
| | 3 Years | 36 | 3600 | 2700 ☐ | 900 | 25% | ☐ Weather station with LCD Clock | OR | ☐ 7 Segment & ADC Module |
| | 5 Years | 60 | 6000 | 3000 ☐ | 3000 | 50% | ☐ Discount Rs. 3000 (50%) | OR | ☐ Arduino & Mango Pi Based Wireless Steering Robot |

### Option 2: Discount Scheme

| Magazine | Duration | Issues | Cover Price (₹) | You Pay (₹) | YOU SAVE (₹) |
|---|---|---|---|---|---|
| Electronics For You | 1 Year | 12 | 600 | 480 ☐ | 120 (20%) |
| | 2 Yrs | 24 | 1200 | 840 ☐ | 360 (30%) |
| | 3 Yrs | 36 | 1800 | 1080 ☐ | 720 (40%) |
| | 5 Yrs | 60 | 3000 | 1500 ☐ | 1500 (50%) |
| Electronics Bazaar | 1 Year | 12 | 1200 | 955 ☐ | 245 (20%) |
| | 2 Yrs | 24 | 2400 | 1675 ☐ | 725 (30%) |
| | 3 Yrs | 36 | 3600 | 2155 ☐ | 1445 (40%) |
| | 5 Yrs | 60 | 6000 | 2995 ☐ | 3005 (50%) |
| Open Source For You (with CD/DVD) | 1 Year | 12 | 1200 | 960 ☐ | 240 (20%) |
| | 2 Yrs | 24 | 2400 | 1680 ☐ | 720 (30%) |
| | 3 Yrs | 36 | 3600 | 2160 ☐ | 1440 (40%) |
| | 5 Yrs | 60 | 6000 | 3000 ☐ | 3000 (50%) |
| Facts For You | 1 Year | 12 | 1200 | 950 ☐ | 250 (20%) |
| | 2 Yrs | 24 | 2400 | 1670 ☐ | 730 (30%) |
| | 3 Yrs | 36 | 3600 | 2150 ☐ | 1450 (40%) |
| | 5 Yrs | 60 | 6000 | 2990 ☐ | 3010 (50%) |

### Introducing EFY's Premium Edition

**Electronics For You PLUS**
(With software-packed DVD)

☐ 1 Year (12 Issues) ~~1200~~ ₹ **960**

☐ 2 Yrs (24 Issues) ~~2400~~ ₹ **1800**


• To Subscribe Online, Visit: http://pay.efyindia.com • For Online Renewal, Visit: http://pay.efyindia.com/renew

Name_____ Designation_____ Organisation_____

Mailing Address_____ City_____

Pin Code_____ State_____ Phone_____ Email_____

Subscription No. (for existing subscribers only_____. I would like to subscribe to the above (✓)marked magazine(s) starting with the next issue.

Please find enclosed a sum of Rs_____ by DD/MO/crossed cheque*bearing the No._____ dt._____ in favour of

**EFY Enterprises Pvt Ltd**, payable at Delhi. *(*Please add Rs 50 on non-metro cheque)*

*Send this filled-in form or its photocopy to :*

**EFY Enterprises Pvt Ltd** D-87/1, Okhla Industrial Area, Phase 1, New Delhi 110 020
Ph: **011-26810601-03;** Fax: **011-26817563;** e-mail: **info@efyindia.com**

EFY SINCERELY YOURS

**www.efyindia.com**

Don't Miss A Single Issue! | Ensure Regular Supply | FREE Replacement Policy* | Order Now For FREE Home Delivery

* Replacement will be made if intimation of damaged / non-receipt of copies is received within 30 days of its publication
** If you are not satisfied with the magazine & services your balance amount will be returned

# How to Select a 3D Printer

If you are planning to buy a new 3D printer to speed up product prototyping, here is a guide for choosing the most suitable printer for your application

**ANAGHA P.**

The idea of 3D printing technology was first introduced back in 1984. Though 3D printing is now utilised in a variety of applications, this concept is relatively new for the Indian industry.

## In the field of electronics

Karan Chaphekar of KCbots says, "3D printing has yet to percolate everyday life, but at present, the main application is in rapid prototyping by an engineering and design team (at a start-up, SME, etc) or by hobbyists who want to make unique things."

A basic 3D printer can be of great advantage for electronic product designers or innovators. According to Paul Anand of Biotz, "The most important part lies in mechanics designs of any electronic gadget they design. In this era, user-centric design is becoming the key differentiator for product optimisation." A 3D printer lets the user create rapid prototypes of different designs, which can be sent for user feedback and optimisation. It reduces the size of product considerably and saves time and effort.


CubeX Duo 3D printer

## Attributes to consider

***Print speed.*** The speed of a printer can be defined as the time taken to print a specific distance in the Z-axis. It is usually represented in millimetres per hour or inches per hour. With larger print speed, we get the model printed faster. However, print speed may depend on some other factors such as complexity of the model to be printed or type of printing material used. Print speed determines how fine and dense your structure will be printed. The speed generally has an inverse relationship with print complexity and quality. The faster the print, the lower the quality. The greater the complexity the lesser the print speed. It is important to select a model that offers a trade-off between speed and quality of print.

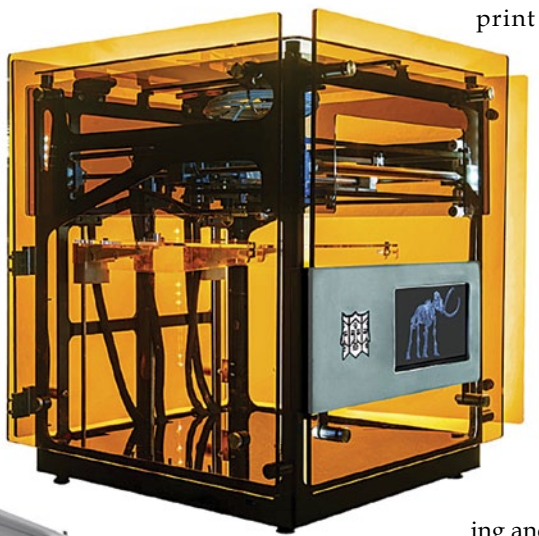

Brahma3 Anvil 3D printer

***Complexity.*** Complexity of design that can be printed is determined by three factors: slicer software support, support structure generation and print speed. Some applications require composite design features, such as multiple layers and complex curves. So it is necessary to first define the demands of your specific application.

***Print platform.*** The size of the print platform determines the maximum dimensions that can be printed using a particular printer. It is usually measured in inches or centimetres in XYZ dimensions. For electronics designer, 203×203×203mm would be a good start. Print platforms of 229×229×229mm or more are used in industries. If the printing job can be split into smaller parts and combined later, you can go for smaller build area. Larger print area avoids the need for this scaling and slicing of the print.

***Resolution.*** Resolution can be of two types:

*Vertical Z resolution/layer height/layer thickness* is usually defined by the thickness of each layer the printer can create in one pass. The smaller the layer thickness, the higher the resolution. Small resolution gives smoother and more realistic print outputs, but this also increases the time to produce the final product as the number of layers increase.

On the other hand, larger resolutions provide models with lesser finish in lesser time. Models that let the user choose layer thickness are also avail-

# Learn & Implement

## your Innovative Project ideas with Scientech

**Wireless Digital Radio-SDR**

*New*

In Software Radios a large portion of functionality is implemented through programmable Signal Processing devices. Ease of design & manufacture, multi-mode operation, use of advanced Signal Processing techniques, fewer discrete components, and flexibility to incorporate additional functionality are few advantages of Software Radios for which they are emerging in commercial and military infrastructure.

Scientech Wireless Digital Radio-SDR is a complete solution to learn & develop concepts of Software Defined Radio in a real-time environment. User can study and design all the building block of Software Radio like Baseband and RF sections.

### Project / Labwork

- Implementation of a wireless digital communication system physical layer including channel coders / decoders, error correcting codes, interleaver/de-interleaver, baseband modulators/de-modulators, bandpass modulators / de-modulators, CDMA-DSSS, OFDM etc.
- Implementation of various DSP blocks like digital filters, interpolation/decimation, digital up-converter/down-converter etc.
- Implementation of user defined waveforms.

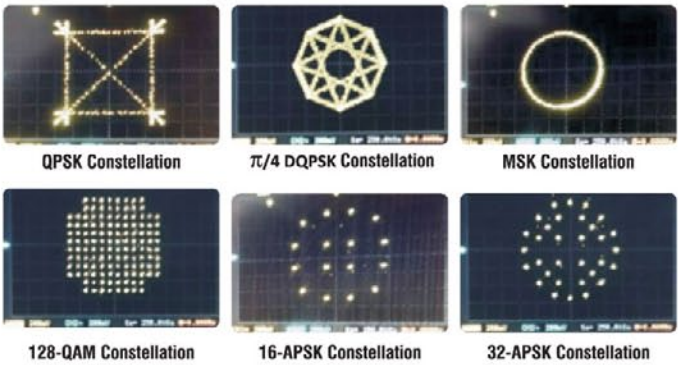

QPSK Constellation | π/4 DQPSK Constellation | MSK Constellation

128-QAM Constellation | 16-APSK Constellation | 32-APSK Constellation

Designed & Manufactured in India by -

**Scientech Technologies Pvt. Ltd.**

✆ +91-731-4211100, ✉ info@scientech.bz, www.ScientechWorld.com



Scientech

## 3D Printer Models and Their Specifications

| Vendor | Product | Print speed (optimal) | Layer height | Print platform | Print head/ extruder | Supported materials | Technology | Price | Website |
|---|---|---|---|---|---|---|---|---|---|
| 3D Printronics | Felix 2.0 | | | 255 x 205 x 235mm | 1 | 1.75mm PLA | FDM | US$ 1365 | http://shop.felixprinters.com/product-catalog/complete-kits/3d-printer-felix-2-0-fully-assembled.html |
| 3D Systems (formerly ZCorp) | ZPrinter 850 | 15mm/ hour | 0.09mm | 508 x 381 x 229mm | 5 | High-performance Composite zp150 | 3dp | Quote | http://www.zcorp.com/en/Products/3D-Printers/ZPrinter-850/spage.aspx |
| Afinia | H479 | | 0.15mm | 140 x 140 x 135mm | 1 | 1.75mm PLA, ABS | FDM | US$ 1599 | http://store.afinia.com/Afinia-H-Series-3D-Printer_p_8.html |
| Airwolf 3D | AW3D HD | 150mm/s | 0.05mm | 300 x 200 x 300mm | 1 | 3mm PLA, PVA, ABS, HIPS, LAYWOO-D3, Nylon | FDM | US$ 2995 | http://airwolf3d.com/store/products/large-3d-printer-model-aw3d-hd/ |
| Altem Technologies | uPrint SE | | 0.254mm | 203 x 152 x 152mm | | ABS Plus | FDM | | http://www.altem.com/products/stratasys/stratasys-products.php |
| Amptronics Systems Pvt Ltd | Dual Extruder 3D Printer | 40mm/s | 0.1mm | 260 x 230 x 200mm | 2 | 1.75mm PLA, ABS | FDM | Quote | http://www.amptronics.com/products/3d-printer/dual-extruder-3d-printer/ |
| Brahma 3 | Brahma3 Anvil | | 0.05mm | 240 x 240 x 240mm | 1 | 3mm PLA, ABS, Nylon, LAYWOO-D3, Laybrick, PVA, PC | FDM | ₹ 100,000 | http://www.brahma3.com/ |
| CAD Centre | ProJet 7000 HD | | 0.05mm | 380 x 380 x 250mm | | VisiJet SL | SLA | Quote | http://caddcentre.co.in/3d-printers-new |
| Chipmax | MBot Cube | 40mm/s | 0.1mm | 200 x 200 x 200mm | 1 or 2 | 1.75mm PLA, ABS | FDM | US$ 999 or 1099 | http://chipmax.in/products_details.php?gid=24 |
| Cubify | CubeX | 15mm/s | 0.125mm | 275 x 265 x 240mm | 1 | PLA cartridge, ABS cartridge | PJP | US$ 2717 | http://www.cubify.com/cubex/store.aspx |
| Cycloid System | CSM1 | 55mm/s | 0.1mm | 220 x 170 x 130mm | | 3mm and 1.75mm PLA, ABS | | Quote | http://cycloid.in/3d-printer-csm1/ |
| Formlabs | Form 1 | | 0.025mm | 125 x 125 x 165mm | | Resin | SLA | US$ 3299 | http://formlabs.com/products/our-printer |
| Hyrel 3D | Professional (E5) | 25mm/s | 0.025mm | 200 x 200 x 200mm | 4 | 3mm PLA, ABS | FDM | US$ 3095 | http://www.hyrel3d.com/e5/ |
| J Group Robotics | Dimension LE | | 0.02mm | 210 x 210 x 210mm | | ABS(+), PLA, Wood, Stone | | ₹ 275,000 | http://www.jgrouprobotics.com/store/details?pid=18&name=Dimension3LE |
| KCBots | KUBE | 70mm/s | 0.1mm | 203 x 203 x 203mm | 1 | 1.75mm PLA | FDM | US$ 900 | http://www.kcbots.com/store/p1/KUBE.html |
| LulzBot | TAZ 3 | 150mm/s | 0.075mm | 298 x 275 x 250mm | 1 | 3mm PLA, PVA, ABS, HIPS, LAYWOO-D3, Nylon | FDM | US$ 2195 | https://www.lulzbot.com/?q=products/lulzbot-taz-3-3d-printer |
| Makerbot | Replicator 2 | | 0.1mm | 285 x 153 x 155mm | 1 | 1.75mm Makerbot PLA | FDM | US$ 2199 | http://store.makerbot.com/replicator2 |
| Protomaker | Sprint | 30mm/s | 0.15mm | 200 x 200 x 200mm | 1 | 3mm PLA, ABS | FDM | ₹ 38,000 | http://www.3dprotomaker.com/shop/sprint-1-detail |
| Real Time Controls P Ltd | D-800 - Delta Printer | | | 450 x 450 x 800mm | | 1.75mm ABS | | | http://accurate3d.com/ |
| RPM Tools Consulting | Robozz P3 | | 0.35mm | 250 x 250 x 200mm | 1 | 3mm PLA | FDM | Quote | http://www.rpmtools.co.in/cnc-routers-educational-series.html#3d-printer-robozz-p3 |
| RS Components | RepRapPro Ormerod | 30mm/s | 0.125mm | 200 x 200 x 200mm | 1 or 2 | 1.75mm PLA, ABS | FDM | US$ 684 | http://uk.rs-online.com/web/p/3d-printers/7952333/ |
| Stratasys | Objet 1000 | | 0.016mm | 1000 x 800 x 500mm | 8 | DurusWhite, FullCure720, MED610, RGD5160-DM, RGD525, Tango Family, Vero Family, VeroClear | Polyjet | Quote | http://www.stratasys.com/3d-printers/design-series/precision/objet1000 |

*—The information, collected from various sources, should be verified before purchase*


MBotCube PVC 3D printer

able. 0.2mm and 0.3mm are the commonly available resolutions.

*Horizontal resolution/XY resolution/ feature resolution* is the minimum displacement that can be made by a print head in the XY plane. It is measured in micrometres (µm) or dots per inch (dpi). Smaller feature resolution corresponds to finer features in the print.

High resolution or reduced error is particularly important if the casting is printed in parts and assembled separately. Low dimensional accuracy models may lead to misfit of parts whilst they are combined to create the final model.

***Printing methods.*** There are several methods of 3D printing. These can be categorised into six core processes:

*Photocuring.*

Uses: Concept models, patterns and prototypes

For example: Stereolithography (SLA/SL), digital light processing (DLP), multi-jet modelling (MJM) and polyjet technology

*Sintering.*

Uses: Functional prototypes, low-volume production of complex components and investment casting

For example: Selective laser sintering (SLS) and direct metal laser sintering (DMLS)

*Melting.*

Uses: Functional prototypes, low-volume production of complex components and tooling components

Electron beam melting (EBM) and direct metal printing (DMP)

*Lamination.*

Uses: Wood-like models and concept models

For example: Laminated object manufacturing (LOM)

*Extrusion.*

Uses: Functional and durable models, production parts and manufacturing tools

For example: Fused deposition modelling (FDM)/fused filament fabrication (FFF), plastic jet printing (PJP) and thermoplastic extrusion


Stratasys Objet1000 3D printer

*Jetting.*

Uses: Large objects, fast and cheap models and smooth models with lots of fine details

For example: Powder bed and inkjet head/3D printing (3dp), MJM, smooth curvature printing (SCP) and DMP

The key advantage of FDM is reusability. Since raw thermoplastic materials are used here, this technology is less susceptible to dimensional changes, unlike other technologies. This technology offers easy material changeover. FDM has fair levels of accuracy which fulfils the needs of a basic perspective making it the most popular in low-end, economical devices. But this method mostly lacks the resolution and finish of a professional-grade output.

SLS is a very expensive but much faster technology, more effective where multiple parts are required. It also offers increased accuracy which is needed for precision engineering applications, and showcases better print quality than high-end FDM machines.

***Colour options.*** Extruder is the print head or the end of the printer where filament is melted and ejected. In extrusion method of printing, the number of print heads usually determines how many colours can be printed at once.

3D printers can be divided into three based on the colour options:

1. *Colour-choice printer.* These printers have only single extruder and can print objects only in one colour at a time. This colour is determined by the colour of the material used for printing, i.e., the object would be green in colour if green filament is used and red in colour if red filament is used.

2. *Basic-colour printer.* These models will have more than one extruder and can print a few colours in a single model.

3. *Full-spectrum colour printer.* Allows to print an object in a zillion different colours. This is achieved by mixing CMYK colour model—cyan, magenta, yellow and key (black) and jetting it on each thin, plaster-based layer.

Filaments of all primary and secondary colours are easily obtained in the market. In addition to these, exotic colours such as gold, silver and fluorescent are also available.

***Cost of parts.*** Cost of parts is expressed in cost per unit volume. Cost of parts is provided by vendors for a specific part, or an average across a group of different parts. These need not necessarily represent the true cost of printing as they exclude the cost of support materials, process waste generated and other consumables used in

the printing process.

When the design to be printed is created and fed to the printer software, most of it shows an estimate of the material consumed for that particular project. This will give the user an idea of the cost to produce a particular model. Nowadays, a kilogram of material is available for around ₹ 4000.

The lowest cost of parts is found in powder-based printing technologies. Inexpensive gypsum is used as base material and the unused powder is continuously recycled and reused by the device. This results in the reduction of cost by one-third or even one-half compared to other technologies.

***Usability, help and support.*** The model should be user-friendly. Check whether the company offers support by mail, telephone, live chat, etc. Many companies do not provide warranty for the printer. So it is safe to double-check that the product you are buying has a warranty cover or not.

SD card and display support are some other factors one can look for in a 3D printer model. Machines that offer these features can work without being connected to a PC.

***Challenges and constraints.*** A huge limitation in the 3D printing technology is that each object can be printed using only one material. It is not possible to use different types of materials at the same time to create a model. Printing in metal is also relatively new in this field. But extensive research is going on in this field and we should soon see mixed materials and fully assembled products coming out of the printer. "In the future, we are going to start to see mixed materials, electronics 3D printing and conductive materials as well," says CarineCarmy, director of marketing, Shapeways 3D Printing Marketplace and Community.

Another hurdle is to increase the efficiency of the printing software. A smarter software could give real-time feedback of the project to be printed, optimise design taking into consideration the physical properties required for the product and the properties of material to be used. A lot of investment is being made in this field.

Our Facebook survey suggested that price of the machine is the major issue from a user's point of view at present. A 3D printer with good specifications can be pretty expensive. One respondee from a professional design background commented on our survey, "3D printers are an expensive fad. For routine mechanical prototype makers, pay off could be sooner, but for occasional mixed technology makers it still does not make sense of buying one." Alan Campbell, a member of our Facebook page *EFY's Electronics Design Community*, commented that he would not prefer buying a 3D printer, "but if someone sets up a (local) shop printing parts made to order, I would give them my business."

For people like Alan, who are not ready to buy their own 3D printer, there are services to get access to high-end industrial 3D printer machines. Such professional 3D printing services could offer high-quality prototypes in about 30 different materials, at affordable costs.

According to CarineCarmy, the home printer is still fantastic for prototyping, but not yet for end goods. There are several 3D printing service providers present today; Shapeways, 3Digiprints, Clarity 3D, 3D Hubs, KadKraft Systems, C4L, Netgains, Sculpteo, i.materialise, Ponoko, 3Ding and CADD Centre to name a few.

3D printing is improving the manufacturing and production of goods worldwide. It could create fast and easy prototypes at a decent cost. This technology makes it possible for you to hold your ideas in your hand, to create something that never existed before; imagination is the limit. 3D printing is going to revolutionise the world. Get ready for it! ●

*The author is a technical correspondent at EFY, Bengaluru*

## Mirrored sun-catchers tap sunlight, say no to bulb

Sunlight has an effect of upheaval for all, and the dull winter mornings steal much of that thrust. Apparently, now with a new simple technology, people will be able to tap sunlight into their homes, by way of mirrored sun-catchers.

A simple installation, the sun-catcher, or a mirrored device reflects sunlight into houses. British designer Lucy Norman's 'Sun Sill' fabricates sunlight using windowsill-mounted mirrors to bounce in short supply of sunlight into the dark interiors. The technology is a boost to people who cannot afford electricity or light bulbs.

Just like a computer-controlled heliostat, Sun Sill's mirrors are controlled via a smartphone application that tracks the user's location and automatically determines the best position for the mirrors to catch sunlight into the same spot all day. The phone app is an optional choice and the sills can be moved manually.

*Mirrored sun-catchers*

## Now a vending machine for 3D printers

Mechanical engineering graduates at the University of Idaho in the town of Moscow have come up with a new vending machine for 3D printers. SkyForge makes use of a 3D printer to sell plastic items that are only limited by the imagination of its users.

A limited access to their university's 3D printers is what prompted them to go ahead and start a company, Element Robot, and then build their own machine. They then placed the machine in the university's centrally located chemistry lab so anyone could retrieve printed items at their beck and call (paying some money of course!). It is fun because you will have a couple of students walk by and they will see it operating. They get drawn in and they get stuck watching it. The invention is already garnering more than 100 users with approximately another two signing up to use the machine every hour, claims Element Robot.

SkyForge prints items up to the size of a basketball by squirting layers of polylactic acid (PLA) plastic onto a glass plate heated to 437 degrees. Users can upload designs they want to Element Robot's website.

## A GPS-based system that tracks how far your e-mail has travelled

Jonah Brucker-Cohen, a design lecturer has developed a free and open source plug-in for standard e-mail software such as Apple's Mail and Gmail that basically calculates the number of miles an e-mail has travelled before reaching an inbox. 'E-mail Miles' makes use of GPS technology and Internet tracking to determine where a message initially originated from and where it was received. The technology then calculates the total distance between the two and displays it on the screen alongside a map.

The system does its time and distance calculations using the Internet and a coordinated mapping system. When all of the mileage amounts are tallied, it adds them and provides the user with a map, the countries, continents and miles the e-mail travelled.

E-mail Miles scans outgoing e-mails and their destination servers for their geolocation. It then calculates the distance in miles, countries and continents the mail has travelled and tags each incoming e-mail with this info.

## Timesaver—a new iOS time-tracking app

TimeSaver is a time-tracking utility for iPad, iPod and iPhone, which keeps track of all of your various projects and endeavours and provides you with statistical feedback on how much time you have spent on any particular project, when you last worked, and even provides a graph so you can see your progress over time.

This app tracks time for any amount of subjects, displays a 'stats' page for details on progress, provides a progress chart to see your progress, sends study reminders via local notifications, tweets

FLIR®

# Small
# Rugged
# Unique
# Powerful

**Special offer**
**INR 54,000/-***
(* Local Sales Tax Extra)


## FLIR® i3

FLIR i3 is the smallest, lightest and most affordable true thermal imaging camera on the market!

- It features **60x60 pixel resolution** which is over 4 times the amount of pixels of comparable solutions.
- It is incredibly easy to use and requires no former experience.
- It really is a matter of "point-shoot-detect" to obtain high-quality thermal images that will immediately give you the thermal information you need.

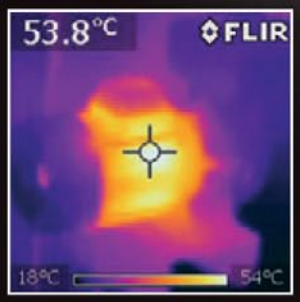


*Engine inspection*

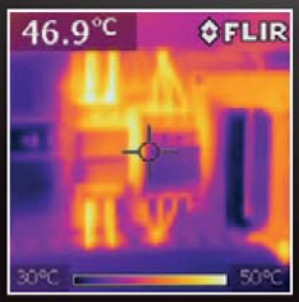


*Overheated connection*

## Contact us:

**FLIR Systems India Pvt Ltd.**
1111, D-Mall, Netaji Subhash Place,
Pitampura,
New Delhi – 110034. INDIA
Tel : +91-11-4560 3555
Fax :+91-11-4721 2006
E-mail : flirindia@flir.com.hk



www.flir.com

and posts your progress to Facebook and tracks the amount of time you spend working out of the office.

## Coming soon: Free Internet for all

Media Development Investment Fund has come out with a rather innovative project that aims to bring 'free' Internet for one and all across the globe. The Outernet project will not only provide free Internet, but also make it available even in the most inaccessible areas of the earth such as deserts, oceans and remote islands.

The project will make use of satellites known as Cube-sats, which will cover every corner of the earth and relay Internet through specially-designed antennae placed on the ground. However, it must be noted that Outernet has not been designed to replace traditional Internet connection, as its speed is slow. It will be a solution for those who cannot afford paid Internet services.

## A device that sends flavoured tweets and smelly texts

Does the idea of sending a chocolate-flavoured tweet or a strawberry-smelling text to the ones you love excite you? Of course it does. And it is possible now as researchers at Harvard University have come up with a rather unique mobile handset that can change the way we send/receive data. The device named oPhone will make it possible to send smelly calls and texts.

*oPhone is a cyclinder packed with a tiny chip, oChip, capable of producing smelly calls and texts*

The device is equipped with an odour chip called oChip that aids in sending and receiving specific smells via phone call, text or social media. It further makes use of Bluetooth and smartphone attachments to send the same.

Scents are deconstructed by an aroma expert. The specific aroma profiles are captured and loaded into the oChip. The unique device is capable of sending complex smells to people. The oChip is touted to release thousands of 'unique' odours for 20 to 30 seconds on the go. Possible medical uses include allowing Alzheimer's patients to recollect old memories.

## Coming soon: An affordable robot for household chores

British inventor, Sir James Dyson, is working on an affordable robot to carry out chores around the house. Sir James said soon a new generation of robots that understand the world around them will be able to clean the house, put out the bins and even keep an eye out for intruders." Sir James claims his firm is currently competing with Japanese rivals to become the first to create an advanced generation of household robots. Twendy-One, a humanoid robot that can help with housework and nursing care, has already been unveiled by Waseda University in Tokyo and will be on sale within a few years.

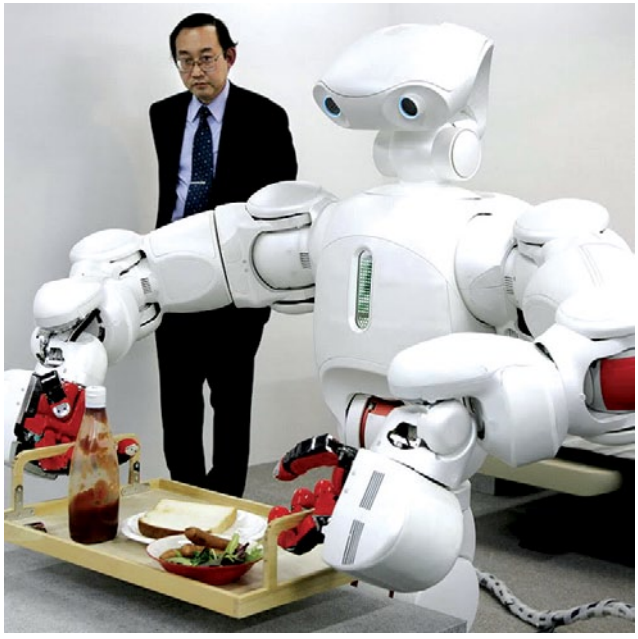

*Twendy-One, a humanoid robot in action*

It has also been speculated that Google is building an Android army after recently acquiring a number of robotic and artificial intelligence companies. According to him, domestic use will be the initial focus of the research. What robots need to function in the home is vision and the ability to interact intelligently. In a complex environment—the home or garden—a machine must understand and perceive. This technology will have a wide range of applications.

## Crawling lizard-like robots for cleaning spaceships

The engineering department of Simon Fraser School of Engineering has developed the gecko-technique-inspired lizard-like robot that can climb and crawl. According to the European Space agency, this lizard-like robot will help in maintaining a fresh and clean wall inside the spacecraft. The maintenance service of the walls of a spaceship has now become easier after the development of the gecko-technique-based robots.

## Snippets

### Bolt, a free calling solution in Android

If you face problems of combining free calling service with a full-fledged phone dialer app that can replace your phone's standard dialer, the Bolt claims to be a solution. The app asserts to be different from other Android free calling apps such as Viber, Skype and many more.

### World's first smart earphones

Here's calling all the audiophiles out there, your life is about to change, for the better! German sound and software company BRAGI has come out with the world's first smart ear buds! The Dash is a wireless pair of completely discrete buds, which you can either connect to your smartphone or use its internal 4GB memory storage to directly load your songs.

### World's slimmest smartphone

Chinese smartphone maker, Gionee, has introduced its latest offering, the Gionee Elife S5.5. At mere 0.55cm, the Gionee Elife S5.5 might just be the world's slimmest smartphone to date.

The European Space Agency has informed that this tiny-legged crawling feature-oriented robot is inspired by the biologically inspired robotic system. The robots designed by Simon Fraser School of Engineering department have their footpads covered with dry microfibers modelled on the toe hair of the gecko.

## A watchdog device that can bridge any sensor or alarm to the Internet

Phantom Data Services has introduced a PhantomLink Watchdog adaptor for do-it-yourself Internet alarm monitoring and remote sensor monitoring applications. The Watchdog device is a small but powerful electronic adaptor that can bridge nearly any sensor or alarm to the Internet, providing users with instant e-mail and text message alerts.

The Watchdog's on-board microprocessor and integrated Web server makes the device a truly self-contained solution. Users can easily configure server settings, e-mail settings, trigger thresholds, trigger delays and notification intervals through the simple Web interface.

The current version of the PhantomLink Watchdog supports up to five trigger inputs (up to 15V DC), and can notify up to two e-mail or text message accounts. The device is powered by 5-15V DC power supply.

## View Taj Mahal in 360-degree panorama on Google Street View

Google, in association with the Archaeological Survey of India (ASI), is reportedly releasing the first 360-degree online imagery of select 30 landmarks that best describe the Indian heritage sites. Now you can practically get a virtual tour of major landmarks in and around New Delhi, and also various other landmarks in the country. The Google Street View with the ASI is mapping the monuments on Google Maps and Google Cultural Institute.

The heritage sites include the iconic world monuments including Taj Mahal, Humayun's Tomb, Red Fort, Agra Fort and many more. The panoramic imagery of these 30 sites come as part of the joint initiative by the two organisations to help make a total of 100 premier heritage sites in India more approachable for everyone across the globe.

## Made Nest thermostat open-source alternative

The Nest Learning Thermostat is originally an electronic, programmable and self-learning Wi-Fi-enabled thermostat that optimises heating and cooling of homes and businesses to conserve electricity.

Interestingly, the team at Spark has successfully built an open-source Nest thermostat alternative in less than a day, proving to the world that the acclaimed lab's well-arranged assemblage of glass and aluminium is not actually that hard to copy. But what is remarkable is the fact that Spark has also open sourced the entirety of the project, making it a lot easier for other designers to carry on forward what the Spark team has done so far.

The understandably less pretty version of Nest's thermostat, the Spark prototype features just about the same array of features as the original, including sensors for temperature, humidity and motion. Further, there is also a machine-learning component which helps the device automatically adjust temperature based on user habits. All of this of course syncs with the device's Web interface, which users can access from their phones. Also remarkable is the fact that the team has built the entire prototype as well as copied the underlying software of Nest thermostat to great approximation.

## Now micro-windmills to recharge your mobile phones

Recharging a mobile phone might be a cumbersome task for many, with all the crazy wires and plugs and what not! However, Dr Smitha Rao and J.C. Chiao from the University of Texas at Arlington have taken your recharging experience to an all-new level and a windy one at that.

In an example of a menacingly amazing piece of engineering, the duo have succeeded in developing micro-windmills that are just 1.8mm at the widest point, but it is only the beginning. Host hundreds of such windmills on your mobile phone and what you get is nothing short than a marvel, the entire apparatus can then charge your mobile phone on the go, claim the developers.

Intricately blending the concepts of origami and wafer-scale semiconductor devices, the developers were able to create a complex 3D structure from 2D metal pieces. In what seems to be nothing less than an engineering delight, the effort surely indicates what the future has in store for the world in terms of technology and electronics. As they say, the possibilities are indeed limitless.

Check efytimes.com for more news, daily

# Smarter cores. Smarter bodies.

RENESAS RL78

Next-generation Renesas RL78/F12 16-bit MCUs realise low power consumption and high performance for a wide-ranging automotive body control applications, including lighting module, power window, wiper and remote keyless entry. Features like watchdog timer, ADC operation and data flash help you build compact and energy-efficient systems at lower total cost.


## Advanced features

**RL78 16-bit MCUs**
- Up to 32 MHz
- 20-64 pins
- Data Flash
- Array of 16 bit Timer
- A/D converter
- LIN interface
- 1.8-5.5V, -40 to 125 ℃ operation

**True low power**
- Built-in energy saving "SNOOZE" mode
- No need to wake up CPU for receiving data
- A/D conversions and serial data input whilst in standby modes

**Support functional safety**
- On-chip A/D converter testing function and RAM guard

## Applications

- High-intensity discharge lighting system
- Power window
- Wiper
- Power slide door
- Remote keyless entry
- Air conditioning

## For more information

http://sg.renesas.com/RL78F1X

Learn more!

Renesas Electronics Corporation

Join us on Facebook

http://sg.renesas.com



RENESAS

# Managed Leased Line Network

With the burgeoning need for the leased line, managed leased line networks (MLLNs) are being adopted and preferred by several businesses for fulfilling their telecommunication needs. Let us go through the technology of MLLNs, their advantages, usage, basic configuration, working, equipment involved, etc

**DR RAJIV KUMAR SINGH**

In the present age of globalisation, businesses are spread all around the world. In order to operate the business smoothly, there is a strong need for a dedicated telecom link that can connect geographically spread out locations of several businesses. The telecom facility may be either shared such as dial-up lines or non-shared such as leased lines and managed leased line networks (MLLNs). Obviously, businesses prefer a highly secured dedicated non-shared communication facility that is available all the time.

A leased line is a dedicated link or telecommunication path provided between two fixed locations, which is made available round the clock for use by the designated user (an individual or a company). Leased lines are provided to users for internal communication between their different business centres/offices/factories at various locations within a city or different cities on a point-to-point basis or on a network basis.

These leased lines can carry voice, data and video and can be used for connecting telephone sets, computers, electronic private automatic branch exchange (EPABX) and for establishing a virtual private network (VPN). These lines are exclusive for the designated user and are particularly not shared in common amongst multiple users as dial-up lines.

Such ordinary leased lines are not very efficient and have lots of disadvantages such as limited range of services, bandwidth support only up to 64kbps (2.4kbps, 4.8kbps, 9.6kbps and 64kbps), no support for n×64kbps bandwidth provisioning, cumbersome operation and vendor-specific equipment.

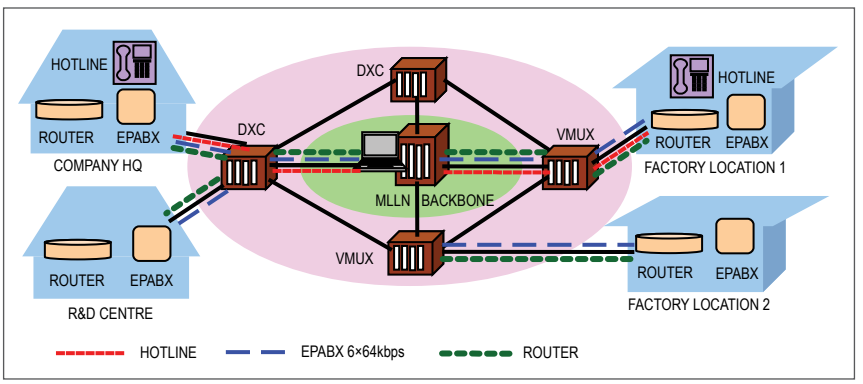


*Fig. 1: A typical MLLN set-up*

Other disadvantages are first-generation network elements with minimal maintenance features, difficult fault isolation and rectification, no centralised alarm or performance statistics monitoring, no health diagnostics for the network, high lead time for new circuit installation, manual verification of resources needed, cross-connection of individual circuits done at the channel level, poor customer satisfaction, no proactive maintenance, high mean time to repair (MTTR), no guaranteed quality of service (QoS), no way to measure circuit quality or generate customised performance reports, poor network reliability and availability, non-redundant network elements, no alternate routing of circuits in case of failure and no centralised network management system (NMS).

## Applications of MLLN

Managed leased line network (MLLN) is a system that can provide leased line connectivity, that is, a dedicated telecommunication path between two fixed points. It is an integrated, fully managed, multi-service digital network platform through which a service provider can offer a wide range of services at an optimal cost to business subscribers. MLLN allows the service provider to keep an end-to-end control and monitor over the leased line and hence provide guarantees of uptime of the circuit.

With the use of managed leased line circuits by various sectors such as banking and financial institutions, stock markets, news and print media industry, broadcasting houses and Internet service providers (ISPs), people of all the sections are benefitted by way of accessibility of bank accounts from anywhere, instant news coverage, faster Internet access, etc.

The applications/services offered by MLLN are:

***1. Speech circuits (hot line or P-wire).*** Dedicated telecom links for speech, say, hot line for voices between two different locations is established by local or long-distance circuits within a city or between two different cities. The terminating equipment at both ends is telephone set without dialling facility. In such a connection, both-way signalling and speech is possible.

# MAX TECHNOLOGY & CO.

MAX GOLD®

COPYRIGHT ©

## AN ISO 9001:2008 CERTIFIED COMPANY

### MAX 850 : SMD REWORK STATION

- Hot-Air Soldering & De-Soldering Station.
- Different Nozzles to suit your needs.

### MAX 8550 : 3-IN-1 SMD REWORK STATION

- Hot-Air Soldering & De-Soldering Station.
- Micro Soldering Station.
- 1.2V DC-18V DC Digital Regulated Power Station.
- Different Nozzles to suit your needs.

### MAX 525 : BATTERY ANALYZER (MOBILE TESTER)

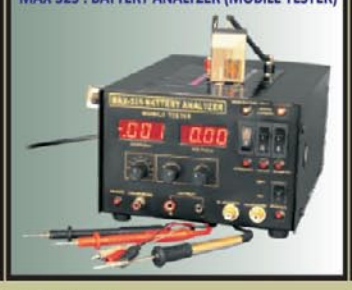

- Battery Analyzer.
- Micro Soldering Iron.
- Digital Power Supply with Reconditioning System.
- Voltage & Ampere check with Continuity Buzzer.
- Turn ON any mobile without battery.
- Charge your Mobile battery without Mobile Handset.
- Speaker, Ringer & Vibrator check.

### MAX 7805:7-IN-1 SMD REWORK STATION

- SMD Rework Station with Synchronized Air & Temperature.
- Micro Soldering Pen.
- Battery Analyzer 1.5V to 18V DC Regulated Digital Power Supply with Reconditioning System.
- Voltage & Ampere Check with Continuity Buzzer.
- Test Speaker, Ringer & Vibrator.
- Turn ON any mobile without Battery.
- Charge your mobile battery without handset.
- Car Charger Socket for Mobile Charging.

### MAX 535:VARIABLE SOLDERING STATION

- 5-35 Watt Soldering Iron.
- Tip-Heating Technology.
- Multi-Bit gives you Fine Quality Soldering.
- For all types of electronic works.

### MAX 550 MICRO SOLDERING STATION

- 5-15 Watt Soldering Station.
- Tip-Heating Technology.
- Multi-Bit gives you Fine Quality Soldering.
- For Dentist & Jewellery Wax Designing.
- Watch Repairing & Electronics SMS Soldering Works.

### MAX 586 : PTH DE-SOLDERING STATION

- Vacuum Pump type De-Soldering tool.
- Equipped with Nozzle with Built-in heater which provides excellent thermal recovery.
- Variable heating control to suit your needs.

### MAX 250:POWER SOLDERING STATION

- 25 Watt Soldering Iron.
- 2Amp/1.5V - 18V Digital Power Supply.
- Digital Display helps in controlling the Voltage accurately.

### MAX READING LAMP

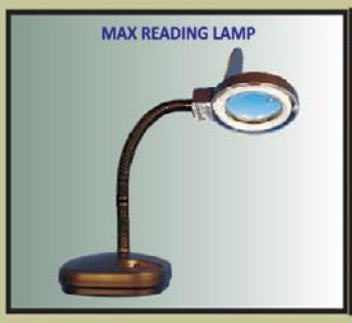

- Reading Lamp with Illuminated Magnifying Glass.
- 10X Magnification.

### MAX HIGH QUALITY LONG-LIFE SOLDERING BIT/TIPS

- High Quality Long-Life Soldering Bit/Tips.
- Corrosion Resistant.
- Fine Quality Soldering.

### MAX PCB CLEANER

- Cleans the PCB very effectively.
- Removes all types of residue on the PCB.
- Environment Friendly. Non Corrosive. Non-Conductive.

### MAX SOLDERING PEN

- 15W Soldering Pen.
- 35W Soldering Pen also available.
- Energy Efficient.
- Tip Heating Technology.

### MAX SOLDER BALL & MAX SOLDER PASTE

- Ultra-Pure.
- Results in great quality Solders.
- Melts easily and forms proper shape.

### MAX SOLDER WIRE & MAX SOLDER BAR

- Ultra-Pure.
- Results in great quality Solders.
- Melts easily and forms proper shape.

### MAX SILICON LIQUID FLUX / MAX FLUX

- Non-Messy Output. No Residue on PCB.
- No Foul smell or Smoke.
- Very high Ignition Temperature - approximately 400 Degrees.
- Environment Friendly. Non Corrosive. Non Conductive.

### MAX SILICON FLUX


- For Soldering & De-Soldering of all types of SMD, SMT & DIP Components.
- Environment Friendly. Non Corrosive. Non-Conductive.

366, Ahmed Mansion, 1st Floor, Lamington Road, Mumbai-7. Tel.: 91-22-2382 1313, 2384 1313, 6124 6393 Fax: 91-22-6633 3729

**E-mail: info@maxtechnoindia.com • Website: maxtechnoindia.com**

**DISTRIBUTOR: Delhi**-Metro Electronic Product Tel.: (011) 2386 8195, 47508195, 23875355, E-mail: infometroq@gmail.com. • **DEALERS—Mumbai:** Skyking Agencies Tel.: (022)2388 6857/7629,2387 1582, Fax: 91-22-23860523 E-mail: skyking@vsnl.net • **Chennai** - Arihant Impex - Tel.: 044-42149893, 42131652 Fax: 91-44-42041651Precious Electronics Tel.: 044-28549095, 28549166 Fax: 91-44-28414729, E-mail: precious@md2.vsnl.net.in **Kolkata** - Tel.: (033) 40066064, 40066020, **Baroda** - King's Electronics Tel.: (0265) 2420538, 2420207, E-mail: kingsqline@indiatimes.com. **Kerala -** Indiatel Tel.: (0484) 2354013 **Bangalore-** Abhishek Electronics Tel.: 080-22293170 / 41140170, Email: kailashjain75@yahoo.co.in

***2. Data circuits.*** Dedicated local or long-distance point-to-point or point-to-multipoint data circuits at different speeds, namely, n×64kbps and up to 2Mbps can be offered for different bandwidth needs of the customer. MLLN offers flexibility of providing leased circuits with speeds of n×64kbps and up to 2Mbps with differential time-dependent bandwidth provisioning.

***3. Private data network.*** More than one local or long-distance leased circuits can be provided such that data from one leased circuit can be transferred automatically to another leased circuit for the same subscriber.

***4. International leased circuits.*** International long-distance leased circuits can be offered for business across the globe, which are useful for Internet leased lines and international private leased circuits (IPLCs).

The MLLN also supports enhanced features such as corporate hi-speed Internet access, EPABX interconnection, EPABX remote extension (EPABX of one city can be connected to EPABX of another city), ISDN (integrated services digital network) line extension, virtual private network (VPN), local area network (LAN) interconnection (LAN of one city can be connected to LAN of another city) and extension of VPN to customer through MLLN. A typical MLLN system connecting various facilities of a customer is shown in Fig. 1.

## Salient features of MLLN

The MLLN service is specially designed for having effective control and monitoring on the leased line so that the downtime is minimised and the circuit efficiency is increased.

MLLN mainly deals with data circuits ranging from 64kbps to 2048kbps (n×64kbps). One of the major attractions of MLLN is its ability to provide differential time-dependent bandwidth on demand basis to the customers. For example, it is possible to provision 1024kbps MLLN circuit for 16 hours a day and 512kbps for remaining 8 hours of the day, as per the requirement of the customer.

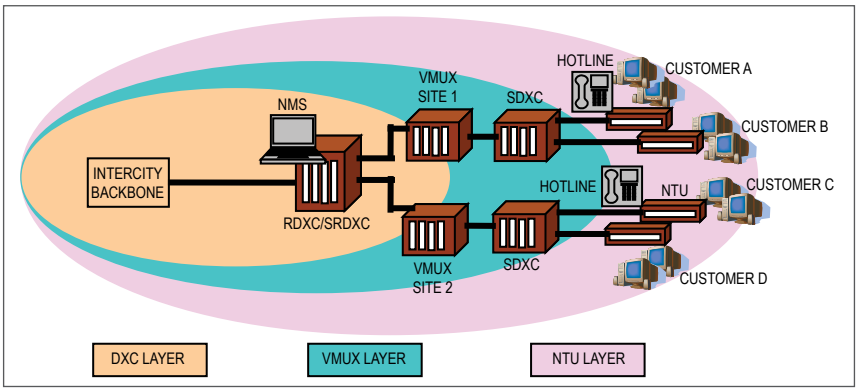


*Fig. 2: MLLN architecture*

Another great thing about MLLN is its very efficient NMS that can proactively maintain the circuit without waiting for customers to book a complaint. NMS provides features such as bandwidth management, alternate or back-up transmission routing, powerful diagnostics and maintenance tools and self-repair tools.

MLLN-NMS also provides periodic performance report which is useful in providing high-speed leased lines with improved QoS, high availability and reliability to the business and good service to existing customers.

The network management system also supports service provisioning, network optimisation and planning and service monitoring. The system offers features such as end-to-end circuit creation and monitoring, software loop test to check connectivity of various network elements and fault isolation and software programmability of customer end equipment.

MLLNs offer great amount of security because media is not shared and is exclusively dedicated for a particular subscriber. With MLLN, lead time is very low for provisioning of a new leased line. Its modular system and new application can be implemented very fast by simply adding or plugging the units.

## MLLN architecture

MLLN network is a three-tier structure and comprises network elements such as digital cross connects (DXC), versatile multiplexer (VMUX), network termination units (NTU) and NMS (Fig. 2).

Stage 1 comprises NMS, regional DXC (RDXC) and/or sub-regional DXC (SRDXC), billing servers, database servers, etc. At this stage, all the network management functions are done from the central location. This stage provides connectivity to second-stage nodes and provides traffic aggregation.

Second stage comprises SRDXC, SSDXC (secondary switching DXC) and VMUX, and is located in major cities where demand for leased line is high. This stage provides connectivity to third stage and performs leased line traffic aggregation.

Third stage comprises VMUX and NTU and is located in small cities/towns where leased line demand is lower (approximately 20). This stage provides leased line traffic aggregation.

The media for interconnecting various network elements and extending line up to customer end may be optical fibre, copper wire, radio, microwave transmission or a combination of these.

MLLN has to provide high reliability service and is supposed to obtain efficiency greater that 99.5 per cent. Therefore all the interconnections of different network elements are provided as rings, wherever available, so that an alternate circuit path can be automatically used for routing the traffic in case of main route failure. In long-distance network, links between the same stations can be split into alternate physical path of rings to the extent feasible. This also saves on-port capacity required for providing alter-

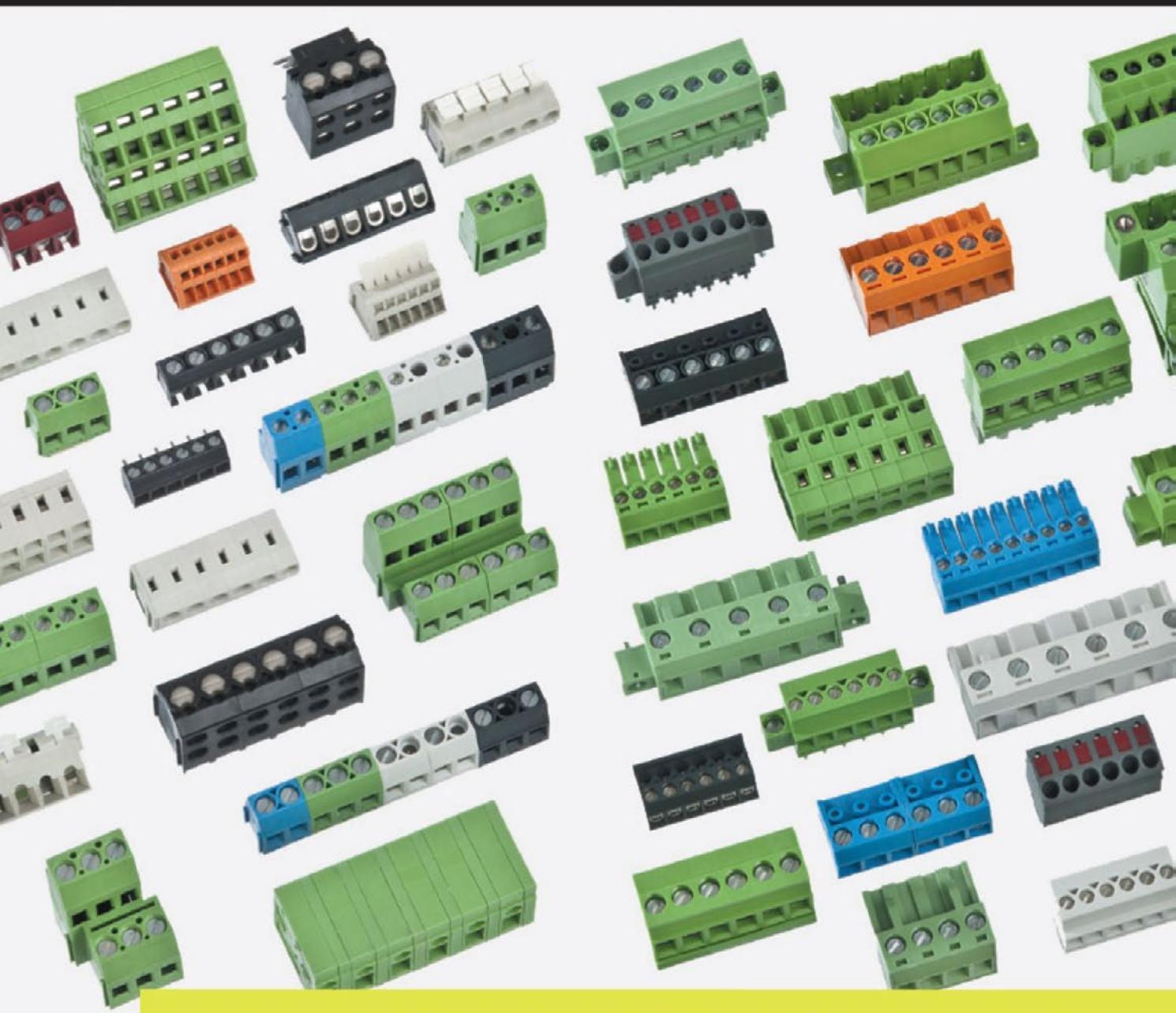

nate path within MLLN.

With these network elements, the MLLN is able to provide functions such as fault, configuration, accounting, performance and security management.

***Network management system (NMS).*** It is built on open architecture and relational database system and manages all the network elements and their functions centrally. It is able to configure, provision, manage and monitor all aspects and parameters of the remote elements of the MLLN network centrally without the need of any local intervention.

On-demand bandwidth configuration is performed at NMS and priority can also be set for a particular leased line. This enables the high-priority customer lines to be routed first to the standby route in case of failure of the main route.

Any change of configuration of any network element is auto-recognised by the NMS. NMS is also capable of re-initialisation of the network element in the event of software/hardware failure. A predefined routing schedule is used by NMS to perform fast re-establishment of circuits within the network across alternative paths totally automatically, in the event of failure.

A detailed fault report is generated in order to identify the exact problem so that immediate corrective measures can be taken in order to restore the services.

The fault information provided by NMS contains type of faulty network element, the time at which fault occurred, time when it corrected, etc. The NMS keeps polling all the network elements after some predetermined interval and generates alarms so that proactive measures can be taken.

***Digital cross connect (DXC).*** It is a large-capacity cross-connect device that separates channels coming from other devices and rearranges them into new channels for output. A digital cross-connection allows lower-level time division multiplexing (TDM) bit streams to be rearranged and interconnected amongst higher-level TDM signals. The signal is first de-multiplexed into a lower level after which it is cross-connected and then multiplexed again.

***Versatile multiplexer (VMUX).*** It is a small capacity cross connect device with several channel interfaces which is installed at different sites for providing user connectivity. VMUX multiplexes all tributaries coming from other devices and forms a higher hierarchy level output at the specified port. The VMUX is provided with different types of interfaces to connect SDSL and HDSL product family modems. The number of interfaces (such as 64/128kbps, n x 64kbps, E1 or hotline) depends on the type of VMUX configuration (VMUX type I, VMUX type II, VMUX type III/DC operation and VMUX type III AC operation).

***Network terminating unit (NTU).*** It is simply a base band modem and which is located at the customer's premises. The NTU works on normal AC supply. NTUs of various capacities (64/128kbps and n×64kbps) are available with several interfaces (V.35, G.703, Ethernet). NTU also allows for the use of existing telecom copper cables (twisted pair) for digital traffic with medium distances (~5 km) and high speeds.

## Conclusion

In the changing economic environment, dependence of organisational and industrial activities on leased circuits is increasing. In such a scenario, high QoS, high efficiency, highly secured network, customer-oriented tariffs along with desired bandwidth, time-dependent bandwidth provisioning, no congestion, centralised control and monitoring, lower lead time for new installations and proactive fault maintenance prove MLLN to be a commercial boon for corporate and individual customers. ●

*The author is working with Bharat Sanchar Nigam Limited. He holds a Ph.D. degree in electronics engineering from Indian Institute of Technology (BHU), Varanasi. His current research interests include wired and wireless technologies for high-speed Internet access*

Part 2 of 2

# How to Ensure E-mail Security

In the first part, we talked about how the e-mail system works and issues in its security including threats such as loss of confidentiality and integrity, disclosure of sensitive information, exposure of systems to DoS attacks, exposure of individuals to denial of service attacks, etc. In this part, we will discuss challenges related to e-mail authentication and spam, e-mailing the right people, preparing backups, avoiding fraudulent e-mails and malware, etc

**RAKESH SHUKLA**

E-mail authentication has become a big problem and many methods are being incorporated by e-mail servers across the world to overcome this problem. There are many techniques which have been used these days for managing challenges related to e-mail authentication and spam. We will discuss three main techniques here:

***1. DomainKeys identified mail (DKIM).*** This is a method for e-mail authentication that allows a person to verify the e-mail received in which the e-mail claims to have arrived from a particular domain. The need for this type of authentication arises because spam often has forged headers.

For example, a message claims in its 'From:' header to be from impersonator@192.9.200.251. But the e-mail is not actually from the 192.9.200.251 domain. In this scenario, the recipient can raise a complaint to the system administrator for 192.9.200.251 domain, but even then there will be no solution for the same. It also becomes difficult for recipients to establish whether such domains are good or bad. And system administrators may have to deal with complaints about spam that appears to have originated from their systems, but did not.

DKIM is one such solution which uses public-key cryptography to allow the sender to electronically sign legitimate e-mails in a way that can be verified by recipients. Prominent e-mail service providers implementing DKIM include Yahoo and Gmail. Any mail originating from these domains carries a DKIM signature, and if the recipient knows this, he can discard mail that has not been signed, or that has an invalid signature.

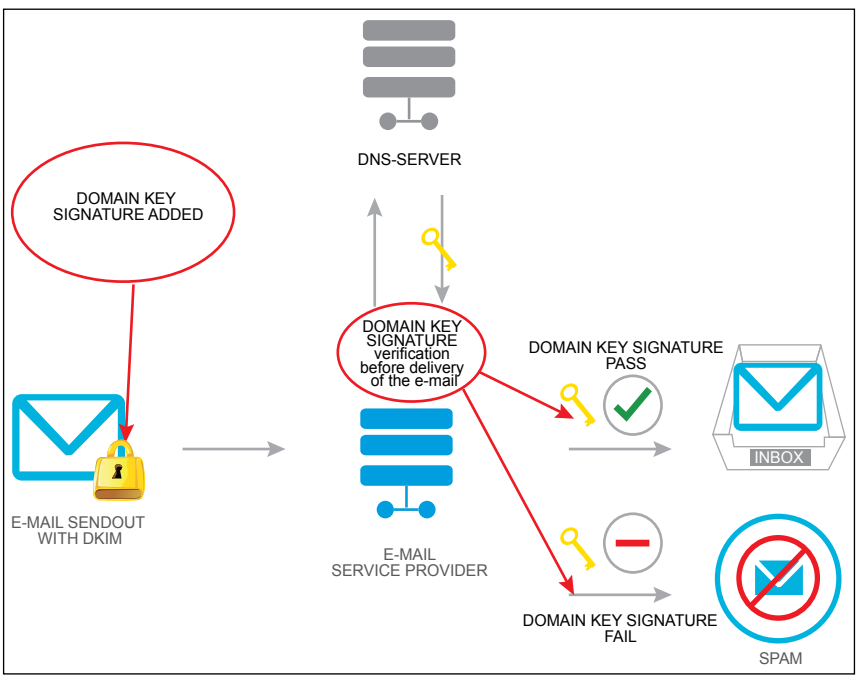


*Fig. 7: DKIM flow*

DKIM also guards against tampering with mail, offering almost end-to-end integrity from a signing to a verifying mail transfer agent (MTA). In most cases, the signing MTA acts on behalf of the sender by inserting a DKIM-signature header, and the verifying MTA on behalf of the receiver, validating the signature by retrieving a sender's public key through the DNS. DKIM adds a header named 'DKIM-Signature' that contains a digital signature of the contents (headers and body) of the mail message. The default parameters for the authentication mechanism use SHA-256 as the cryptographic hash and RSA as the public key encryption scheme, and encode the encrypted hash using Base64.

The receiving simple mail transfer protocol (SMTP) server then uses the name of the domain from which the mail originated, the string _domainkey and a selector from the header to perform a DNS lookup. The returned data includes the domain's public key. The receiver can then decrypt the hash value in the header field and at the same time recalculate the hash value

for the mail message (headers and body) that was received. If the two values match, this cryptographically proves that the mail originated at the purported domain and has not been tampered with in transit. The DKIM is depicted in Fig. 7.

***2. SPF.*** Sender policy framework (SPF) is an e-mail authentication system designed to prevent e-mail spam by detecting e-mail spoofing, a common vulnerability, by verifying sender IP addresses. SPF allows administrators to specify which hosts are allowed to send mail from a given domain by creating a specific SPF record (or TXT record) in the domain name system (DNS). Mail exchangers use the DNS to check that mail from a given domain is being sent by a host sanctioned by that domain's administrators.

SPF can be implemented in three steps:

*1. Publish a policy.* Domains and hosts identify the machines authorised to send e-mail on their behalf. They do this by adding additional records to their existing DNS information. Each and every domain name or host that has an 'A' record or 'MX' record should have an SPF record specifying the policy if it is used either in an e-mail address or as HELO/EHLO argument. Hosts which do not send mail should have an SPF record published that indicates such ("v=spf1 -all"). For validating the SPF record, one can use the testing tools provided on the SPF project Web page.

*2. Check and use SPF information.* Receivers use ordinary DNS queries, which are typically cached to enhance performance. Receivers then interpret the SPF information as specified and act upon the result.

*3. Revise mail forwarding.* Plain mail forwarding is not allowed by SPF. The alternatives are:

*Re-mailing.* Original sender is replaced with one belonging to the local domain.

*Refusing.* Reply 551 is given which says that user not local; for example, please try user@rakesh.com

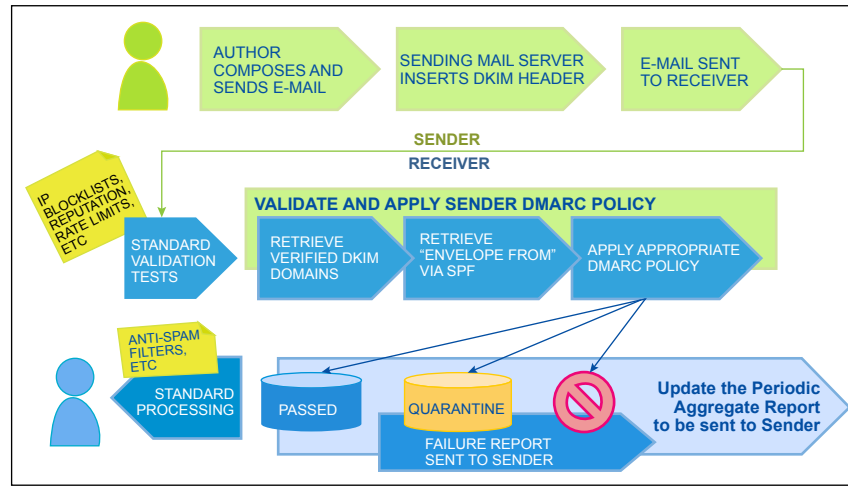


*Fig. 8: DKIM, SPF together into action*

*Whitelisting.* Done on the target server, so that it will not refuse a forwarded message

*Sender rewriting scheme. Yet another option*

Thus, the key issue in SPF is the specification for the new DNS information that domains set and receivers use. The records laid out below are in typical DNS syntax. Note that RFC 4408 recommended that both SPF and TXT records be used (during the transitional period), although either by itself was acceptable.

The sample SPF records are displayed below:

```
rakesh.com. IN TXT "v=spf1 a mx -all"
rakesh.com. IN SPF "v=spf1 a mx -all"
```

'v=' defines the version of SPF used. The following words provide mechanisms to use to determine if a domain is eligible to send mail. The 'a' and 'mx' specify the systems permitted to send messages for the given domain. The '-all' at the end specifies that, if the previous mechanisms did not match, the message should be rejected.

Comparing SPF and DKIM, we can say that SPF validates the message envelope (the SMTP bounce address), not the message contents (header and body). It is orthogonal and complementary to DKIM, which signs the contents (including headers). In brief, SPF validates MAIL FROM versus its source server; DKIM validates the 'From:' message header and a mail body by cryptographic means.

One of the problems with DKIM is that if the message is significantly modified en route by a forwarding mechanism, such as a list server, the signature may no longer be valid and, if the domain specifies that all e-mail is signed, the message may be rejected. Also, many central antivirus solutions add footer that the e-mail has been scanned and the date of the signature files. Some free e-mail servers also add advertisements at the bottom of the e-mails. Many domains, however, say that only some of their e-mail is signed, and so a missing or broken signature cannot always be used to reject e-mail.

The solution is to sign all your e-mail. If the only modifications en-route involve the addition or modification of headers before the DKIM-Signature: header, the signature should remain valid. Also the mechanism includes features that allow certain limited modifications to be made to headers and the message body without invalidating the signature. We can suggest that this limitation could be addressed by combining DKIM with SPF, because SPF (which breaks when messages are forwarded) is immune to modifications of the e-mail data, and mailing lists typically use their own SMTP error address or Return-Path.

In short, SPF works without problems where DKIM might run

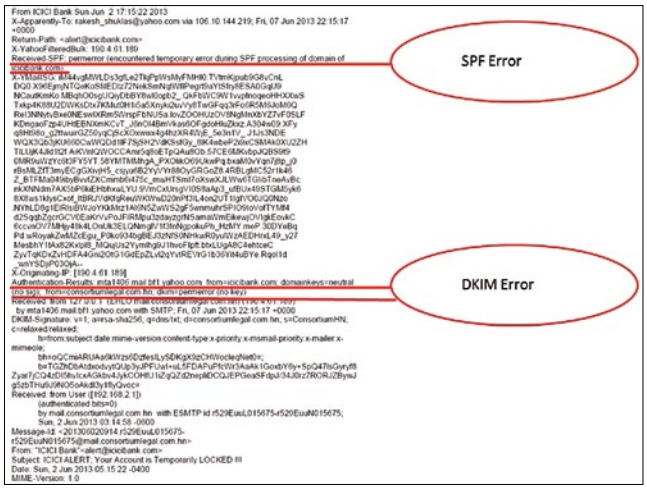


*Fig. 9: DKIM/SPF authentication and validation failed*

into difficulties, and vice versa. Fig. 8 shows the e-mail sent using DKIM and how the DKIM signature looks and how the decision is taken to pass it to inbox or spam. To see the DKIM signature and SPF record, you can go to your e-mail client (Gmail or Yahoo) and invoke the view full header option. In Fig. 9, we can see that the DKIM/SPF e-mail authentication failed. SPF shows that there is a permanent error in processing of domain of ICICI bank. The sample e-mail in Fig. 9 is a phishing attack mail which came to the spam folder of my e-mail. It arrived in my spam folder as the SPF/DKIM processing failed. In Fig. 10, we can see an e-mail sent from rakesh_shuklas@yahoo.com to rakesh_shuklas@yahoo.com, which is a self-mail sent by me. The e-mail passed both DKIM and SPF.

Now we will discuss some tips which can be address, accessing, browsing and using e-mail and e-mail accounts.

## Properly managing your e-mail accounts

***1. Using just one e-mail account.*** E-mail users often think that their e-mail accounts, like their home address, should have only one e-mail address. A good rule of thumb for the average e-mail user is to have separate e-mail accounts for work and personal requirements and an e-mail account for general use like signing up for newsletters and posting e-mail account for online activities, such as blogs and online forums.

***2. Closing the browser after logging out.*** When checking e-mail at a library or cybercafé, one not only needs to log out of the e-mail but also needs to close the browser window completely. Some e-mail services display the username (but not your password) even after logging out. Whilst the service does this for convenience, it compromises your e-mail security.

***3. Forgetting to delete browser cache, history and passwords.*** After using a public terminal, it is important to delete the browser cache, history and passwords. Most browsers automatically keep track of all the Web pages that have been visited, and some keep track of any passwords and personal information that were entered in order to help out to fill similar forms in the future. If this information falls into the wrong hands, it can lead to identity theft and stolen bank and e-mail information.

Because the stakes are so high, it is important that Internet users be aware of how to clear a public computer's browser cache so that they can delete private information before lurking hackers get hold of it. In Mozilla's Firefox, simply press Ctrl+Shift+Del. Opera users need to go to Tools>>Delete Private Data. Users of Microsoft's Internet Explorer need to go to Tools>>Internet Options then click the 'Clear History,' 'Delete Cookies' and 'Delete Files' buttons.

***4. Using unsecured e-mail accounts to send and receive sensitive corporate information.*** Large corporations invest huge amounts of money to ensure that their computer networks and e-mails remain secure. Despite their efforts, careless employees using personal e-mail accounts to conduct company business can pass along sensitive data and can undermine the security measures in place. So ensure that company's security is not risked by transmitting sensitive company data via personal computer or e-mail address.

## E-mailing the right people

***1. Use the blind carbon copy (BCC) option.*** When BCC: option is used, rather than the CC:, none of the recipients can see the addresses of the other e-mail recipients. E-mail users often rely too much on the TO because it is the default way of sending e-mails. This is fine as long as writing to just one person or a few family members. But if you are sending a mail out to a diverse group of people, it raises some serious privacy and security concerns.

It takes just one spammer to get a hold of the e-mail and immediately everyone on your e-mail list gets spammed. I am not saying that honesty of the group is in question. There are many e-mail programs that are set up to automatically add to the address books any incoming e-mail addresses. That means that some people in the group will inadvertently have added the entire list to their address book and, as a result, if one of their computers is infected with 'Zombie' (used for distributed denial of service attack) and silently sends out spam e-mails, it will cause the entire list to get spammed.

***2. Using the 'Reply All' button.*** Sometimes the mistake is not in deciding between CC: and BCC: but between hitting 'Reply All' instead of 'Reply.' When using Reply All, it is to be kept in mind that e-mail message is sent to everyone included on the original e-mail and, if the information is strategic in nature, this step can be disastrous from both a security and personal humiliation perspective.

***3. Spamming as a result of forwarding e-mail.*** Forwarding e-mails can be a great way to quickly bring

someone up to speed on a subject without having to write up a summary e-mail but, if proper care is not exercised, forwarding e-mails can create a significant security threat. As an e-mail is forwarded, the recipients of the mail (until that point in time) are automatically listed in the body of the e-mail.

As the chain keeps moving forward, more and more recipient IDs are placed on the list. Unfortunately, if a spammer or someone just looking to make a quick buck gets hold of the e-mail, he can sell the entire list of e-mail IDs and then everyone could start receiving spam. It only takes a few seconds to delete all the previous recipient IDs before forwarding a piece of mail. You can this avoid the terrible situation of you being the cause of all your friends or coworkers getting spammed.

## Making backups and keeping records

***1. Failing to back up e-mails.*** Many a times e-mails are used to make legally binding contracts, major financial decisions and conduct professional meetings. Just as we keep a hard copy of other important business and personal documents, it is important to regularly back up these important e-mails to preserve a record. This will be helpful in the scenario when an e-mail client crashes and entire data is lost. The frequency of backups depends on e-mail usage, but under no circumstances should it be done less frequently than every three months.

***2. Mobile access.*** Presuming a backup exists. Mobile e-mail access, such as through Android/smart phones/Blackberry, has revolutionised the way we think about e-mail; no longer it is tied to a PC, but rather it can be checked on-the-go anywhere. Many a times, BlackBerry users simply assume that a copy of the e-mails they check and delete off the BlackBerry will still be available on their home or office computer.

But it is important to keep in mind that some e-mail servers and client software download e-mails to the Blackberry device and then delete them from the server. Thus, for some mobile e-mail access devices, if e-mail is deleted from the device, it is deleted from the Inbox. Just be aware of the default settings of e-mail client and ensure to keep a copy of the retained e-mail. It also happens in the case of MS Outlook that the e-mail is downloaded onto the PC. Here I would like to mention that it is the protocol which does it. By protocol I mean POP3, which downloads all the e-mails onto the hard disk and clears them from the e-mail server until explicitly told by the setting. This setting is shown in Fig. 11. By default, this setting is unchecked in MS Outlook, so all the e-mails when downloaded on the local hard disk get deleted from the e-mail server.

***3. Thinking that an erased e-mail is gone forever.*** It is to be noted that even after deleting an e-mail message from Inbox and the Send folder, it often exists in backup folders on remote servers for years, and can be retrieved by skilled professionals. So e-mail can be like a permanent document.

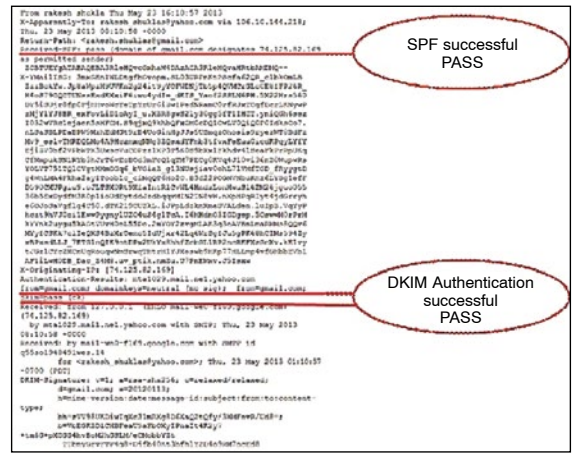


*Fig. 10: DKIM/SPF authentication and validation successful*

## Avoiding fraudulent e-mail

***1. Prize/lottery/scam mails.*** Spammers use a wide variety of clever titles, which often include social engineering to get one to open e-mails which they fill with all sorts of bad things, such as:

(i) Winning of the Irish lotto, the Yahoo lottery, or any other big cash prize

(ii) Nigerian king or prince trying to send $10 million

(iii) Bank account details reconfirmation immediately. This is a common phishing attack

(iv) Unclaimed inheritance

(v) Resending the mail not sent as 'Returned Mail'

(vi) The news headline e-mail

(vii) Winning an iPod Nano e-mail

***2. Not recognising phishing attacks in e-mail content.*** While never opening a phishing e-mail is the best way to secure your computer, even the most experienced e-mail user will occasionally accidentally open up a phishing e-mail. At this point, the key to limiting your damage is recognising the phishing e-mail for what it is. Phishing is a type of online fraud wherein the sender of the e-mail tries to trick you into giving out personal passwords or banking information. The sender will typically steal the logo from a well-known bank or PayPal and try to format the e-mail to look like it came from the bank.

Usually, the phishing e-mail asks to click on a link in order to confirm banking information or password, but it may just ask to reply to the e-mail with personal information. Whatever form the phishing attempt takes, the goal is to fool you into entering your information into something which appears to be safe and secure, but in fact it is just a dummy site set up by the scammer. If you provide the phisher with personal information, the information will help the scammer to steal identity and money from your accounts.

***3. Signs of phishing.*** You can identify a phising e-mail from:

(i) A logo that looks distorted or stretched

(ii) E-mail that refers to as 'Dear Customer' or 'Dear User' rather than

# MOTWANE

## M – Series Digital Multimeters

- *Smart Ergonomic Design*
- *Rugged Double Mould Casing*
- *High Accuracy*
- *Safe to use*

Toll Free
**1800 233 7766**


### M42 TRMS
- 4000 Count LCD Display
- mV Range with 1000MΩ input impedance.
- 20A AC/DC current with overload protection.

### M41 Average
- 4000 Count LCD Display.
- Rugged Mechanical and Electrical Design.
- Temperature measurement (-20˚C - 1200˚C).

### M21C handy
- 2400 count LCD Display.
- 0.5% basic Accuracy.
- Continuity measurement with audiovisual indication.

### M63 TRMS
- 6000 Count LCD Display.
- AC/DC Current up to 20A.
- DC mV range facility.
- Suitable to work in high energy intensive and tough environment.

### M65 TRMS | Dual Display
- 6000 Count LCD Display.
- 0.25% basic DC Voltage accuracy.
- 1000 V AC/DC measurement.
- µA measurement range facility.


REGISTERED OFFICE & FACTORY

**THE MOTWANE MFG. CO. PVT. LTD.**

Gyan Baug, Motwane Road, Nashik Road - 422 101 Tel.: +91 - 253 - 2463752 / 53 Fax.: +91 - 253 - 2463197

e-mail: sales@motwane.com www.motwane.com

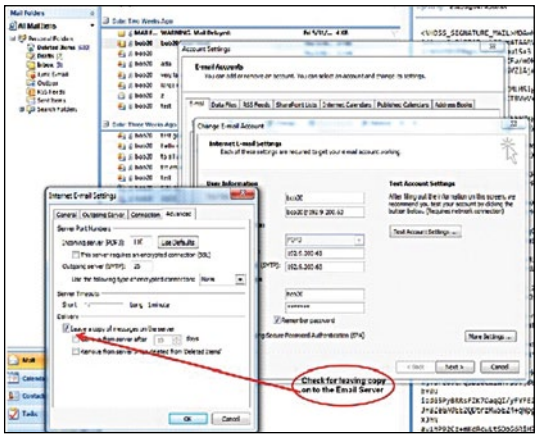


*Fig. 11: Whilst checking the e-mail using MS Outlook checking the option ensures that a copy of the e-mail lies in the e-mail server as well*

including actual name

(iii) E-mail that warns that an account of yours will be shut down unless you reconfirm your billing information immediately

(iv) An e-mail threatening legal action

(v) E-mail which comes from an account similar but different from the one the company usually uses

(vi) An e-mail that claims 'security compromises' or 'security threats' and requires immediate action

If you suspect that an e-mail is a phishing attempt, the best defence is to never open the e-mail in the first place. But assuming that the e-mail has been already opened, do not reply or click on the link in the e-mail. Verify the message, manually type in the URL of the company into your browser instead of clicking on the embedded link.

***4. Sending personal and financial information via e-mail.*** One should avoid writing to a bank via e-mail with personal and financial information and consider any online store suspicious that requests to send private information via e-mail. The rule of avoiding financial information in e-mails to online businesses also holds true for personal e-mails. If, for example, credit card information has to be shared with your family member, it is far more secure to do so over the phone than via an e-mail.

***5. Unsubscribing to newsletters never subscribed to.*** A common technique used by spammers is to send out thousands of fake newsletters from organisations with an 'unsubscribe' link on the bottom of the newsletter. E-mail users who then enter their e-mail into the supposed 'unsubscribe' list are then sent loads of spam. So if you do not specifically remember subscribing to the newsletter, you are better off just blacklisting the e-mail address, rather than following the link and possibly picking up a Trojan horse or unknowingly signing for yet more spam.

## Avoiding malware

***1. Trusting your friend's e-mail.*** Most Internet users are very careful when it comes to e-mails from senders they do not recognise. But when a friend sends an e-mail, all caution goes out of the window as they just assume it is safe because they know that the sender would not intend to hurt them. The truth is, an e-mail from a friend's ID is just as likely to contain a virus or malware as a stranger's.

The reason is that most malware is circulated by people who have no idea they are sending it, because hackers are using their computer as a zombie. It is important to maintain and keep updated e-mail scanning and antivirus software, and to use it to scan all incoming e-mails.

***2. Deleting spam instead of blacklisting it.*** An e-mail blacklist is a user-created list of e-mail accounts that are labelled as spammers. When an e-mail sender is blacklisted, e-mail client stops trusting these e-mails from this particular sender and starts assuming that they are spam. Unfortunately, most Internet users are often timid to use the blacklist feature on their e-mail client, and instead just delete spam e-mails. Whilst not every piece of spam is from repeat senders, a surprising amount of it is. So by training to hit the blacklist/spam button instead of the delete button when confronted with spam, one can, in the course of a few months, drastically limit the amount of spam that reaches Inbox.

***3. Disabling the e-mail spam filter.*** Most e-mail users typically do not start out with a lot of spam in their e-mail account and thus do not value the help that an e-mail spam filter can provide at the beginning of their e-mail usage. Because no spam filter is perfect, initially the hassle of having to look through one's spam box for wrongly blocked e-mails leads many new e-mail users to instead just disable their e-mail spam filter altogether. However, as an e-mail account gets older, it tends to pick up more spam, and without the spam filter, an e-mail account can quickly become unwieldy.

So instead of disabling the filter early on, Internet users should take the time to whitelist e-mails from friends that get caught up in the spam filter. Then, when the levels of spam start to pick up, the e-mail account will remain useful and fewer and fewer friends will get caught up in the filter.

***4. Failing to scan all e-mail attachments.*** Ninety per cent of viruses that infect a computer reach it through an e-mail attachment. Yet, despite this ratio, many people do not scan all incoming e-mail attachments. May be it is our experience with snail mail, but often when we see an e-mail with an attachment from someone we know, we just assume that the mail and its attachment are safe. Of course that assumption is wrong, as most e-mail viruses are sent by zombies that have infected a computer and caused it to send out viruses without the owner even knowing.

What makes this oversight even more scandalous is the fact that a number of free e-mail clients provide a built-in e-mail attachment scanner. For example, if we use Gmail or Yahoo! for our e-mails, every e-mail and attachment sent or received is automatically

# Does your design need analog intelligence from an 8-bit microcontroller?

## PIC16F753 enables intelligent sensing plus efficient power conversion and management


**Boost system performance and efficiency, while reducing system costs, with the enhanced analog capabilities of the PIC16F753 microcontroller. With its integrated Op Amp, slope compensation and range of core-independent peripherals, the PIC16F753 enables efficient power conversion and provides a versatile platform for adding intelligent sensing and power management to embedded designs.**

Microchip's PIC16F753 8-bit microcontroller offers all the key features of the PIC12F752 and adds an Op Amp with 3 MHz of gain bandwidth product, in addition to slope compensation for switch-mode power supplies.

Non-overlapping, complementary waveforms, for comparator and PWM inputs, are provided by the on-chip complementary output generator, with dead-band, phase and blanking control, as well as auto shutdown and reset. The on-chip 8-channel, 10-bit ADC can be used to add sensing capabilities, including capacitive touch user interfaces, and two 50 mA outputs support direct driving of FETs. Also on-board are high-performance comparators, a 9-bit DAC, and a capture compare PWM module.

For high-voltage cost-sensitive designs, the PIC16HV753 features a shunt regulator for operation from 2V to a user-defined maximum voltage level, with less than 2 mA operation current.

### GET STARTED TODAY!

1. Free reference design for a high-power LED flashlight
2. Choice of low-cost development tools:
   - PICDEM™ Lab Development Kit
   - PICkit™ 3
   - PICkit Low-Pin Count Demo Board

www.microchip.com/intelligentanalog

PICDEM™ Lab Development Kit (DM163045)

**India Sales Offices:**
**Bangalore** (080) 3090-4444 • **New Delhi** (011) 4160-8631 • **Pune** (020) 2566-1512
**Email:** asia.inquiry@microchip.com

MICROCHIP

**Microcontrollers • Digital Signal Controllers • Analog • Memory • Wireless**

scanned. So if an e-mail user does not want to invest in a third-party scanner (although advisable) and the e-mail provider does not provide a built-in attachment scanning system, one should access the attachments through an e-mail provider that offers free virus scanning by first forwarding attachments to that account before opening them.

## Keeping hackers at bay

***1. Sharing your account information with others.*** Never ask friends/colleagues to check individual e-mail on one's behalf. Of course, friends can be trusted, but once the password is known to anybody other than you, your account is no longer as secure as it was. One more real problem which reaps in is that a friend might not use the same security measures that an individual user will do. A particular friend might be accessing e-mails through an unsecured wireless account, he may not have kept his anti-virus software up to date, or he might be infected with a keylogger virus that automatically steals the password once entered.

So ensure that you are the only person that knows your personal access information. Never write down this kind of confidential information such as passwords, ATM pin, etc where it can be seen by someone else.

***2. Using simple and easy-to-guess passwords.*** Hackers or crackers use computer programs that scroll through common names to compile possible user names, and then send spam e-mails to those usernames. When that spam e-mail is opened, a little hidden piece of code in the e-mail sends a message back to the hacker letting him know that the account is valid, at which point they turn to the task of trying to guess your password. Hackers often create programs which cycle through common English words and number combinations in order to try to guess a password. As a consequence, passwords that comprise a single word, a name, or a date are frequently 'guessed' by hackers.

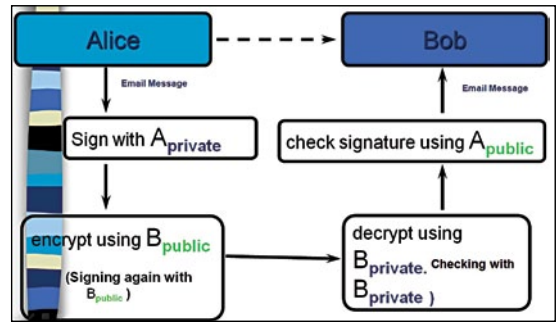


*Fig. 12: A basic digitally signed and encrypted e-mail*

So when creating a password, use uncommon number and letter combinations which do not form a word found in a dictionary. A strong password should have a minimum of eight characters, be as meaningless as possible, as well as use both upper and lowercase letters. Creating a tough password means that the hacker's computer program will have to scroll through billions of options before guessing the password.

***3. Failing to encrypt your important e-mails.*** No matter how many steps you take to minimise the chance that your e-mail is being monitored by hackers, one should always assume that someone else is watching whatever comes in and out of your computer. Given this assumption, it is important to encrypt the e-mails to ensure that if someone is monitoring the account, at least they cannot understand what one is saying. We can go for PGP encryption for personal usage as there is an easy-to-follow step-by-step 20-minute instruction system to install it and it is the most common e-mail encryption standard.

We also have S/MIME but that is more of an industry standard and can be used at official or organisational level. Encrypting all e-mails may be unrealistic, but sensitive e-mails should go in a secure way. Free versions of PGP are widely available on the Internet. Type PGP in www.google.com and you get the link to the PGP site. Download the PGP software and install on your system. PGP is also compatible with e-mail clients like MS Outlook.

***4. Not encrypting your wireless connection.*** Whilst encrypting important e-mails makes it hard for hackers who have access to your e-mails to understand what they say, it is even better to keep hackers from getting access to your e-mails in the first place. One of the most vulnerable points in an e-mail trip is from laptop to the wireless router that has been used to connect to the Internet. Consequently, it is important to encrypt the Wi-Fi network with the WPA2 encryption standard. The upgrade process is relatively simple and straightforward and takes just a few steps. It can be helpful to further enhance your e-mail security.

***5. Failing to use digital signatures.*** The cyber law now recognises e-mail as an important form of communication for major undertakings such as signing a contract or entering into a financial agreement. While the ability to enter into these contracts online has made our life easier, it has also created the added concern of someone forging your e-mails and entering into agreements on your behalf without your consent.

One way to combat e-mail forgery is to use a digital signature whenever you sign an important e-mail. A digital signature will help prove who and from what computer an e-mail came from, and that the e-mail has not been altered in transit.

By establishing the habit of using an e-mail signature whenever you sign important e-mails, you will not only make it harder for the other party to those agreements to try to modify the e-mail when they want to get out of it, but it will also give you extra credibility when someone tries to claim that you have agreed to a contract via an e-mail that you never did. The simple signed and encrypted e-mail flow is shown in Fig. 12. ●

*Concluded*

*The author is working in ADRIN, Department of Space as Scientist 'SF' and involved in developing applications on network and data security*

# In electro-chemical solutions, we reign

In the formulation, manufacture and supply of conformal coatings, thermal pastes, encapsulants, cleaners and lubricants, we have the solution. Through collaboration and research, we're developing new, environmentally friendly products for many of the world's best known industrial and domestic manufacturers – always to ISO standards.

Combine this unique ability to offer the complete solution with our global presence and you have a more reliable supply chain and a security of scale that ensures you receive an exemplary service.


## Thermal Management Solutions

### Created to perform when the heat is on

ELECTROLUBE
THE SOLUTIONS PEOPLE

During use, some electronic components can generate significant amounts of heat. Failure to effectively dissipate this heat away from the component and the device can lead to reliability concerns and reduced operational lifetimes. **Electrolube has the solution.**

- Non-silicone paste
- Silicone paste
- RTVs and bonding products
- Encapsulation resins
- 0.9 to 3.4W/m.k


Isn't it time you discovered how Electrolube can serve you? Simply call, or visit our website.

+91-80-40407110
info@electrolube.in
**www.electrolube.com**

HK WENTWORTH (INDIA) PRIVATE LIMITED.
Private Office 110, DBS House, #26, Cunningham Road, Bangalore 560052, India

ELECTROLUBE
THE SOLUTIONS PEOPLE

# Automobiles with Vision: What We Can Look Forward To

Imagine how difficult it would be to live without sight—the most amazing ability we humans possess. But there are machines that can see, for us. This concept, dreamt of for years, is now ready and deployed. System designers have used embedded vision technology to incorporate exciting vision capabilities in automobiles. Let us dive in to find out more

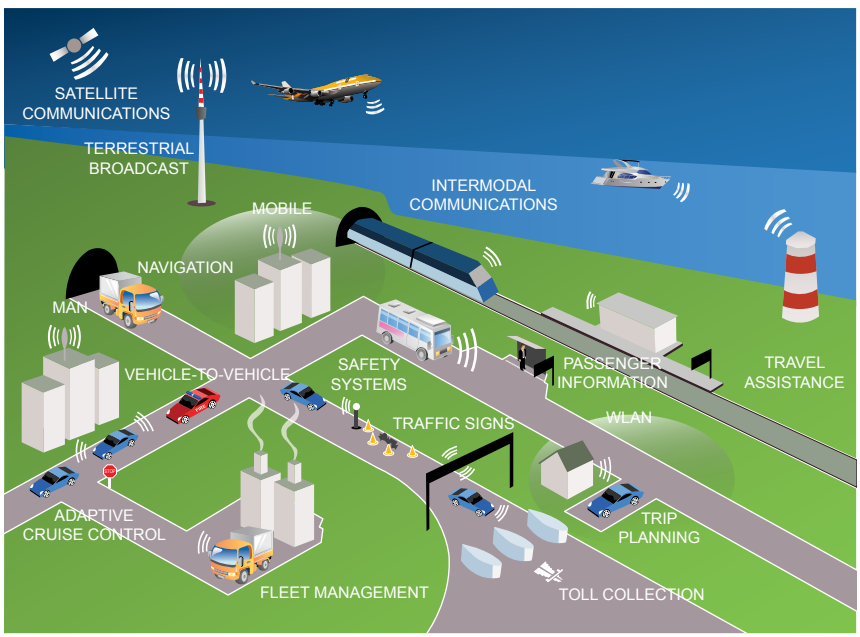


*Fig. 1: Intelligent transportation system—a typical function of an ADAS*

**ABHISHEK A. MUTHA**

Embedded vision technology is based on visual input by using embedded systems. It is basically a combination of two things—embedded systems and computer vision technology.

Once limited to minor use, the field of embedded vision is growing and has now spread to more and more applications. New high-volume markets for this technology include automotive driver assistance, home surveillance and gaming systems. Embedded vision technology within an automobile can serve to enhance one's driving experience immensely.

Technologies that keep drivers alert, safe and accident-free are known as advanced driver assistance systems, or ADAS (a typical function of which can be seen in Fig. 1). Automobiles with such technologies are intelligent vehicles on which sensors, cameras and control systems are integrated to assist in the task of driving. They increase car and road safety. The aim is to combine sensors, cameras and algorithms to understand the vehicle environment so that the driver can receive assistance or be warned of potential hazards. ADAS are usually safety focussed, but are mostly marketed as a convenience. Cameras are the most used sensors in these systems—which can also be called machine-vision systems or intelligent systems.

Cameras and video analytics are used for various applications in automobiles. Advanced vehicles equipped with camera vision use one or multiple cameras to detect and recognise vehicles, pedestrians, traffic signs and so on, around the vehicle, apart from the state of the driver and passengers, with the help of image recognition technologies.

Video content analysis (VCA) is the process to automatically analyse video to detect and determine temporal events not based on a single image. It uses software algorithms for the analysis of CCTV images to detect alarming conditions, such as an intruder moving into a restricted area. The algorithms can be implemented as software on general-purpose systems, or as hardware in specialised video processing units. The major benefit of this technology is the potential for automating the sometimes laborious task of monitoring.

In ADAS, the combination of these technologies makes the driver aware (by using a visual or audio alert) of an object or pedestrian that is approaching really fast. In some cases, the vehicle itself takes some action, such as applying the brakes. The most useful video analytics software can detect objects of a specific size reliably—typically people—whilst ignoring irrelevant objects, and generate an alarm only when specifically set conditions are met, which are configured in the software by the user.

"ADAS represent a major emerging market trend of using video devices inside 'current and future automobiles;'

# Sensor IC Solutions for Today's Changing Automotive World

**Motor Position Sensing**
Digital sensor ICs capable of handling the wide speed range and noisy environment found in motor position applications

**Engine Management**
Extensive design experience has made Allegro the leading crankshaft speed and direction IC supplier to the stop/start market

**Transmission Speed**
Allegro's speed and direction sensing ICs incorporate advanced algorithms to ensure accurate system performance under severe conditions such as large rotational vibration

**Wheel Speed Sensing**
Allegro's wheel speed sensing ICs are capable of handling the harsh conditions common to ABS applications including damaged tone wheels or encoders, ferrous debris, and large temperature gradients.

Sensor packages that simplify magnetic system design in automotive speed sensing applications.

## Industry leading solutions and support

For more than 25 years, Allegro MicroSystems, LLC has designed and manufactured highly innovative sensor and power integrated circuits (ICs) for demanding, safety critical automotive applications found in transmission, engine management, braking, and other highly accurate systems. In fact, Allegro has shipped well over three billion ICs into automotive applications.

Allegro is committed to continue working alongside our customers in developing high-reliability sensor and power ICs, while local sales and technical resources ensure that our customers quickly and effectively receive high-quality service and products.

**Customized features for automotive applications, including:**

- Highly accurate direction detection capability
- Vibration immunity
- On-chip protection circuitry

**www.allegromicro.com/camp1202**

**115 Northeast Cutoff, Worcester, Massachusetts 01606 USA**
**508.853.5000**

**AvantGarde Solutions Private Limited**
C-301, 3rd Floor, Godrej Coliseum
Behind Everard Nagar, Off Eastern Express Highway
Sion (East), Mumbai – 400022

E-mail: contact@avantgardesolutions.in

Allegro™ MicroSystems, LLC

these not only offer driver assistance functions but also fulfill car safety demands," says R.K. Shenoy, senior vice president, Robert Bosch Engineering and Business Solutions.

These systems either use a camera exclusively or, alternatively, may use camera and sensor technology. There could also be a variant of systems built to perform complex applications. Some systems currently use radar technology, whereas high-end systems complement a camera. Radar-based systems offer similar features with the addition of front- or rear-park assistance, forward collision warning, lane change assistance, blind spot detection, collision mitigation braking systems and full-speed range-adaptive cruise control.

Some systems also augment vision with radar and multiple sensors. Most systems available today are passive, that is, they only alert the driver. It is then really up to the driver to take action to avoid the hazard. Multiple manufacturers have started manufacturing and deploying active systems that automatically apply brakes to avoid a hazard. The key challenge with active systems is accuracy.

"With improvements in sensors, processors, algorithms and tools, it has become increasingly practical to incorporate visual intelligence into many kinds of systems, including systems with severe cost, size and power constraints," says Jeff Bier, founder of Embedded Vision Alliance.

## Different applications that use cameras and video analytics in an automobile

Using embedded vision technology, monitoring an object or something specific (like the lanes on the road) is made easy, since the vehicle could alert the driver. A camera could also be mounted and focussed on the driver, to detect if the driver is alert or not, is sleeping, texting or something like that.

"More generally, vision-based subsystems, enabled by the plummeting prices and escalating capabilities of image sensors, processors, memories and other devices, have the potential to enrich the capabilities of diverse system designs. These offer superior features like augmented reality or AR (superimposition of real images with signs), sleepiness detection, gesture-based control, facial recognition-based customisation, signboard recognition (such as speed signs), night vision and detection, video-based automatic parking, etc," says Shenoy.

A lane departure warning system has been designed to warn a driver when the vehicle begins to move out of its lane (unless a turn signal is on, indicating the vehicle will turn in that direction) on free ways and high-capacity urban roads.

An automotive night-vision system increases drivers' perception levels, enabling them to see a longer distance in the dark or in poor weather, beyond the reach of the vehicles' headlights. These are currently offered to customers as optional equipment on certain premium vehicles.

Traffic sign recognition is a technology using which a vehicle is able to recognise the traffic signs on the road, such as speed limits, school-children crossings or a turn ahead. They first appeared in late 2008 on the redesigned BMW 7 series, and then on the Mercedes-Benz S class vehicles. Currently, these systems only detect the round speed-limit signs found all across Europe.

A collision avoidance system is a system of sensors that is placed within a car to warn its driver of any dangers that may lie ahead on the road.

"Many of the vision functions being incorporated or considered for automobiles—such as collision avoidance, AR, gesture user interfaces and gaze tracking—are applicable in many other types of systems, such as robotics, consumer electronics, education and healthcare," says Bier.

At Analog Devices, ADAS developments for vision and radar systems are a focus. Commenting briefly on the challenges faced while coming up with such a system, Somshubhro (Som) Pal Choudhury, managing director, Analog Devices India (ADI) says, "An interesting challenge that we faced recently came from a dual-core DSP chip, developed for an ADAS—a high-performance pipeline video processor, which receives feeds or multiple frames from the camera, processes and extracts information and intelligently takes decisions."

### Embedded System + Computer Vision = Embedded Vision

Most embedded systems perform a specific or dedicated function within a larger system and, as the term indicates, are part of a complete device. The user is typically unaware of this system, and does not want to know whether it includes a processor or a microcontroller. A very common household example is a washing machine, which comprises several embedded systems. On the other hand, computer vision is the science and technology of machines that see; where the machine is able to extract the information from an image that is necessary to solve some task. An obvious device used to implement this technology is a camera. Typical computer vision tasks are recognition (object recognition-identification-detection), motion analysis (motion-tracking-optical flow), scene reconstruction and image restoration.

*Fig. 2: Subaru car camera*

## Why people should adopt ADAS

According to a study, every year, 65 million new vehicles are manufactured and 1.2 million people are killed in vehicle accidents. Hence, vision-based safety systems aim to reduce accidents by warning drivers when they are travelling too close to the vehicle ahead, when there is a pedestrian or cyclist in the path of the vehicle, when there is unintentional lane departure and when drowsiness impacts driving.

Embedded vision technology, when incorporated within an automobile, has the ability to boost efficiency, enhance safety and simplify usability. It upgrades what machines 'know' about the physical world and how they interact with it.

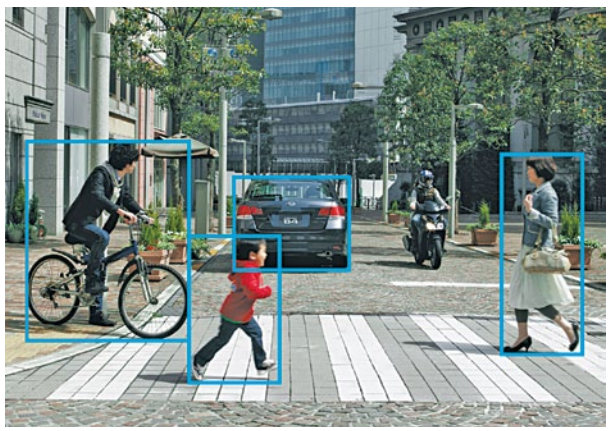

*Fig. 3: Subaru Eyesight's pedestrian detection system*

### ADAS Applications and the Associated Sensor Technology

| | Vision | RADAR | Fusion (vision+RADAR) |
|---|---|---|---|
| Lane-change assist | | × | |
| Lane-departure warning | × | | |
| Lane-keeping assistance | × | | |
| Blind-spot detection | × | × | |
| Pedestrian detection | × | | × |
| Forward-collision warning | × | × | × |
| Forward-collision mitigation | | | × |
| Cross-traffic alert | × | × | |
| Adaptive cruise control | | × | |
| Emergency braking | | | × |
| Intelligent light control | × | | |

*Courtesy: Analog Devices*

Typically, innovative features from the manufacturers are offered on high-end cars as options and eventually trickle down to less-expensive vehicles as costs decline, awareness increases and demand grows.

When asked whether this trend would also be seen in the low-priced vehicles, Somshubhro (Som) Pal Choudhury says, "Currently, this is for the high-end automobiles but as we have seen, technology moves very quickly from high-end cars to the mid-segment, and then to the low-cost vehicles. Going back a couple of years, the air-bag system in Indian cars was almost non-existent but now even the low-end cars have air-bags."

The momentum behind embedded vision applications is growing at an astounding rate and industry collaboration is needed to enable the technology's smooth adoption in new markets. "With Web 3.0 and the car becoming part of the Internet, there are possibilities beyond one's imagination to combine images around the car, and connect from car to car (C2C) and car to infrastructure (C2I)," says Shenoy.

Internet experts think the extensive use of Web 3.0 will be akin to having a personal assistant who knows practically everything about you and can access all the information on the Internet to answer any question you may pose.

## In the near future

Research is still on for autonomous braking. Many accidents are caused by late braking or braking with insufficient force. For instance, when driving at sunset, visibility is impaired to a certain extent, making it difficult to respond fast enough when the driver ahead brakes unexpectedly. Most people are not used to dealing with such critical situations and do not apply enough braking force to avoid a crash. Several manufacturers have developed technologies that can help the driver to avoid such accidents or, at least, to reduce their severity. The systems they have developed can be categorised as follows:

***Autonomous.*** The system acts independent of the driver to avoid or mitigate the accident.

***Emergency.*** The system will intervene only in a critical situation.

***Braking.*** The system tries to avoid the accident by applying the brakes.

Eventually, in the future, such technologies could lead to cars with self-driving capabilities—Google is already testing such prototypes. But Google says, it still needs to do 'millions of miles' of testing before it is ready to offer a self-driving car system for common use. If self-driving vehicles become a reality, the implications would also be profoundly disruptive for almost every stakeholder in the automotive ecosystem. Self-driving cars have the potential to significantly increase driving safety, according to a Google statement.

"Whilst self-driving or driverless cars are still at an experimental stage, and mass adoption is years into the future, smart vision in cars is here today with ADAS. Collision avoidance, traffic sign recognition, pedestrian detection and other driver assistance applications will significantly make our roads safer not only by timely alerting the driver but also taking several preventive actions," believes Choudhury.

However, many in the automotive industry believe that the goal of embedded vision in vehicles is not necessarily to eliminate the driving experience but just to make it safer. ●

*The author is a senior technical correspondent at EFY, Bengaluru*

# Smart and Sustainable Cars: Racing into the Future

Cars are getting smarter, is an understatement. Cars are getting über-smart, is the truth. All aspects of the modern car, from the powertrain to infotainment, are wedded to electronics, communications technology and a good deal of IT too, in the journey towards making driving—even on Indian roads—a really safe, pleasurable and sustainable experience. Here, in this article, we look at some of the multi-faceted roles a modern car plays

*Mahindra Reva solar charging*

**JANANI GOPALAKRISHNAN VIKRAM**

## My car, my guide

One look at a modern car's dashboard is enough to show the amount of vehicle management and driving assistance features are there in it! Advanced driver assistance systems (ADAS) are beginning to feature in many new-gen cars. A blanket term that covers everything from GPS-based navigation aids and traffic updates to adaptive cruise control (ACC), lane departure warning, blind spot detection, collision avoidance, speed adaptation and night vision, ADAS basically covers a growing number of tools that improve situational awareness and understand the driver's temperament and automate routine tasks to make driving more convenient and safe.

"Automakers are trying hard to match consumer experience in cars to what they get using smartphones and tablets. This has resulted in high-end infotainment technologies getting integrated into today's cars. The focus on driver and passenger safety is driving developments in ADAS, based on radar and vision, super data fusion technologies to name a few," says Sanjay Gupta, director—Automotive MCU Group, India Design Centre, Freescale Semiconductors India Pvt Ltd. He cites some interesting examples, such as Volvo's City Safety, a low-speed crash avoidance system available with its XC60 crossover SUV. The detection system uses LIDAR, a cross between laser and radar, to prevent fender-benders below 14.5 kmph.

ACC is also emerging strong. Toyota, Ford, Mercedes and Jaguar already offer this facility on some vehicles. It tracks the car ahead, slowing down and speeding up automatically to maintain a safe distance in variable highway traffic.

"Our 77GHz radar systems support ACC, pre-crash protection and collision warning systems with and without automatic steering and braking intervention. In a collision warning system, the radar chipset can detect and track objects, automatically adjusting the vehicle's speed and distance in response to the traffic ahead and triggering a driver warning of an imminent collision and initiate emergency braking intervention," explains Gupta.

Although still expensive, today we also have technologies that sense when the driver is too tired to drive or has had too much to drink. Volvo, for instance, uses available lane departure sensing technology to detect when sleepy drivers make jerky, telltale steering wheel corrections. The system

then audibly suggests that the driver pull over and take rest.

Ford has an interesting emergency assist feature that connects vehicle occupants with emergency services in the misfortune of an accident, providing vehicle location and an open line for communication. "Ford India is the first auto manufacturer and EcoSport is the only vehicle in its segment to offer a potentially life-saving emergency assistance system. This is a vehicle-based, no-cost, non-subscription call-for-help system that is already available in more than five million Ford vehicles globally. The service is provided free of charge for the ownership cycle of the vehicle," says Vinay Piparsania, executive director, Marketing, Sales and Service, Ford India.

"The ability to determine an available parking space along a roadway, and back in automatically, with no more effort from the driver than the push of a button is being demonstrated by OEMs today," says Tim Lau, associate product line director, Automotive, Broadcom.

Mahindra Reva's new cars feature another interesting aspect called Feedback Orientation. "Since the car is not an isolated object but a part of a system, we are able to get feedback on its performance. The car is able to tell the driver how he is driving, and compare the performances over a period of time, so that the driver can tweak his driving style for efficiency," says Chetan Maini, chief executive officer, Mahindra Reva Electric Vehicles Pvt Ltd.

As ADAS gets more advanced and reliable, it has started to induce some amount of autonomy in cars. Whilst it is still not possible to put a car on auto-drive mode and sit back, next-gen cars will surely let the driver relax and chat while driving. "Automated driving technology, being demonstrated now, will be available as an option on actual models within a few years. It takes control of cars for brief periods.

The technology, which uses a series of camera, radar, laser and ultrasonic sensors 'to become aware of its surroundings,' will relieve drivers of certain tasks—such as keeping a car in lane while rolling down a highway at a steady speed. Ultimately, the technology could take over for the driver in stop-and-go traffic including total control of steering, braking and accelerating. Industry analysts have forecast that 75 per cent of cars on the road will be autonomous by 2035," explains Lau.

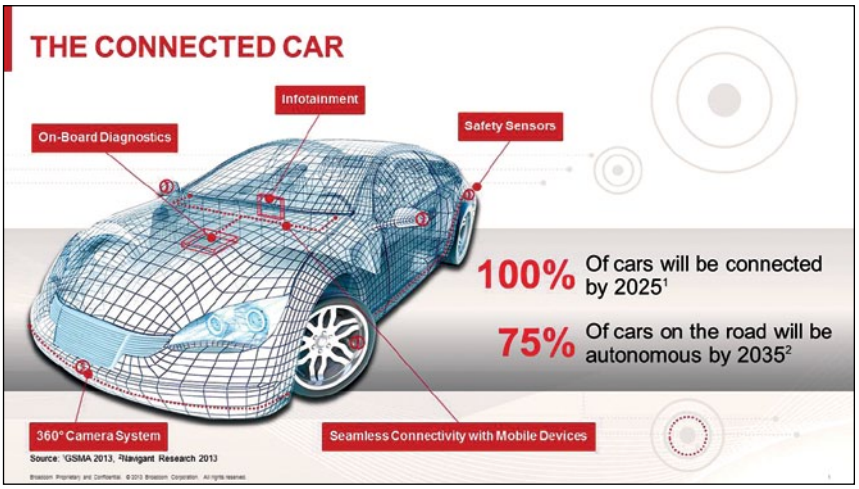

*The connected car (Courtesy: Broadcom)*

***More updates.***

➤ Audi's new Traffic Light Assist system combines the car's GPS navigation system with a city's traffic light information system to let the driver know in advance simply how much time he has to zip past an approaching signal on his route before it turns red. The car maker is testing the system in certain developed nations.

➤ BMW aims to bring autonomous driving assistance into production by end of the decade. In January, they demonstrated a car with advanced computing and GPS technology used in guided missile systems, which is capable of freeing the driver by operating the accelerator, steering and brakes. Its intelligence, supported by a new ultrasonic radar and 360-degree stereo camera technology, enables the car to change lanes to overtake slower vehicles and then pull back in without any assistance from the driver.

## My car, my connected world

Now everyone wants to add connectivity to the car to be able to support features such as a Wi-Fi hotspot, greater amounts of infotainment endpoints, infotainment data, more sensors and cameras, scalable in-vehicle networks, car-to-car communications and other types of applications, but what is the best technology to achieve this with best bandwidth and least cost?

Some of the options are CAN and LIN with a throughput in the range of 2kbps; FlexRay, which does about 10Mbps; and MOST, which offers 150 megabits of shared network bandwidth. But companies like Broadcom bet big on Ethernet. "Ethernet solves a real problem here in that we can address very high bandwidth network applications in a very cost-effective way, over a single pair unshielded twisted cable. It allows the automotive OEMs and Tier-1's to implement very high-end features but at a very competitive price point," adds Lau.

Ethernet also offers benefits like ease of integration and availability from a standard, open and widely-deployed technology. Standardisation is essential as a major enabler for new and innovative in-vehicle applications, allowing automotive manufacturers to meet customer expectations and keep the bottom line in check. Standards-based solutions not only reduce time-to-market, they also ensure availability, lifecycle, upgradability and interoperability.

"Ethernet is ubiquitous in the consumer, enterprise and service provider spaces and yet it has never really been used in an automotive environment, except for one very niche application, which is on-board diagnostics (OBD).

The reason for that was, primarily because of the very strict EMC immunity and emission requirements for automotive in-vehicle networking," he says. To overcome this, Broadcom has developed a technology called BroadR-Reach, which is essentially the ability to send and receive data simultaneously over a single pair of unshielded twisted pair cables, and to still be able to meet all of the automotive EMC quality and reliability standards.

"Wireless connectivity, including Wi-Fi and Bluetooth technology, is being rapidly adopted for automotive applications. Industry analysts have forecast that 100 per cent of vehicles will be connected by 2025 and there will be a 41 per cent increase in automotive wireless demand from 2012 to 2018. Wireless solutions will enable Miracast (a peer-to-peer wireless screencasting standard) bandwidth for multiple in-car displays, smart remote and V2X connectivity and communication with biometric sensors and wearable technology," says Lau.

"In recent years, we have seen the addition of 2D/3D navigation systems, 3G/LTE wireless access, USB and Bluetooth connectivity. These systems are constantly connected to the car, to external devices and to the Internet," says Gupta of Freescale.

At this year's CES, automotive electronics was a key focus and many OEMs and car manufacturers launched varied technologies that will change the way we see automotive today. One such technology was Visteon's OASIS concept—an acronym for optimised, adaptable, secure, intelligent and seamless connectivity—that protects the vehicle communication network by providing a secure method to connect the vehicle to the user and cloud computing.

***More updates.***

➤ After 3G, it is going to be 4G in cars. GM announced it would be building a 4G/LTE connection into ten of its models.

➤ Audi also has similar plans for its A3 model, with AT&T as the data provider.

➤ Ford demonstrated its innovative vehicle-to-vehicle (V2V) communication technology at CES 2014. It uses 802.11p, a flavour of Wi-Fi specific to the auto industry, to broadcast information such as the car's position, direction and speed to nearby cars, ten times per second. This information helps avoid collisions, amongst other benefits.

## My car, my giant personal computer

What is connectivity without apps! Car makers are enabling users to make the most of the car's connectivity through a deep integration with mobile phones, as well as by offering dozens of smart apps through their own infotainment platforms. Going one step ahead, car makers are also linking wearable technology and auto features! Suppliers such as Delphi, Harman, QNX and Garmin are also demonstrating high-end infotainment systems for cars with app integration.

According to trends sighted at CES 2014, HTML5 is the programming language of choice for these platforms, as HTML5 makes it easier for third-party developers to create interesting new apps for cars. Likewise, a recent report by IHS Automotive shows that Linux is growing to be the preferred automotive infotainment platform. Models of Buick, GMC, Chevrolet and Opel use or will soon be using Linux. The report states that other car makers such as BMW, PSA and Jaguar/Land Rover are also committed to using a version of Linux that is compatible with the GENIVI platform.

***More updates.***

➤ BMW's iRemote App allows users to access vehicle information and control features from their mobile device and smart watch.

➤ Mercedes-Benz also recently showed how owners can use a smart watch to remotely unlock doors, check fuel levels, plan the car's trip or blow the horn.

➤ GM demonstrated its App Shop at CES 2014, providing the means for Chevrolet owners to download and install GM-approved apps right into their cars' dashboards.

➤ Audi's next-gen cars will feature an in-built Android tablet, the 26cm (10.2-inch) Audi Smart Display. Powered by an NVIDIA Tegra 4 chip, the tab is extremely rugged with notably high resistance to temperature and physical damage. It uses the in-car Wi-Fi to provide Web access for entertainment, navigation and remote vehicle control.

➤ Mahindra e2o, the new electric car in India, has remote heating, ventilation, air-conditioning system (HVAC) activation via smartphone, a first in India. It also features telematics-based remote diagnostics, a first in India, and one of only four cars in the world and a best-in-class touch-screen-based infotainment unit with navigation, CAN bus integration, iPod integration, Bluetooth and EV status information.

## My car, my silicon

Understandably, a smart car is packed with a myriad of electronics that implement everything from drive safety and engine management to car security and infotainment. This means big opportunity for the semiconductor industry.

"Semiconductor growth in the automotive market will be very significant. We are seeing a lot of growth, not just infotainment and ADAS, but also in powertrain, body control and safety electronics. All of those markets will see significant growth. There are a lot of different sectors that will be able to take a leading role in this market. Semiconductor providers who offer microcontrollers, communications technology and sensor technologies—all of those will take a leading role. At the same time, we believe that the Tier-1's, the resellers, developers, partners, all of them will take a leading role because the connected car ecosystem is going to require a lot more support in terms of software development, application development, hardware engineering, wiring suppliers, cabling suppliers, who will take a leadership role to help take that technology forward," says Lau.

The auto industry consumes microcontrollers, microprocessors, analogue ICs, discrete electronics, logic circuits, sensors and memory for electronic

control systems. The current trend is to use field-programmable gate arrays (FPGAs) and system-on-chip (SoC) or system-on-module (SoM) solutions that combine several components into one small form factor.

Freescale, NXP Semiconductors, Bosch, Infineon, ST Microelectronics and Renesas are amongst some of the key suppliers to the auto industry, offering a horde of solutions for sensing, in-vehicle networking, automotive lighting, car radio and audio to automotive power and telematics on-board units to access and immobilisation. Most of these companies also offer associated design tools.

***More updates.***

➤ Nvidia announced the Tegra K1 processor at CES 2014. With 192 cores, it claims to be the hardware that can fully enable the future autonomous car. Audi will be using the K1 chip in production cars in the near future.

➤ Bosch offers single-chip airbag system ICs that combine power supply, sensor interfaces, I/O functions, firing loop drivers and safing engine on one single chip. The semiconductor industry offers several SoCs, such as angular rate sensors for vehicle dynamics control (VDC), and combined inertial sensors for VDC and active suspension.

➤ The intensive developments in ADAS and infotainment have led to far greater semiconductor requirements, which the semiconductor world is quickly gearing up to meet. Freescale, for example, offers the i.MX6 family, which provides up to four high-performance ARM Cortex-A9 cores, advanced graphics and video accelerators for processing of up to five 1-megapixel video streams at 30 fps for surround view part assist system.

## My car, my pal

Most people love their car like it is their family member. So, would they not like to communicate with their car using more natural communication techniques such as speech or gestures? This is nice, not only from a personalisation aspect, but also from the perspective of safety.

SYNC, an in-car voice-interactive technology featured by Ford helps drivers to pay attention to the road without having to use their hands for making phone calls, browse phone contacts, read texts and browse music. "It helps keep things simple and safe, while on the move," says Piparsania.

Ford also recently announced another technology at the Mobile Developer Summit 2013 in Bangalore—the SYNC AppLink, a technology that allows greater communication between smartphone apps and AppLink-equipped vehicles through voice commands. It will be launched in India in 2014. "This technology will allow greater integration with a range of smartphone apps. AppLink is a Ford-created software technology and the industry's only system that can control smartphone apps via voice control. The platform is planned to be introduced in India with ESPN cricinfo, MapmyIndia, burrp!, Glympse and TuneIn Radio while encouraging app developers to come up and add new applications," says Piparsania.

"Enhanced gesture control is a strongly emerging trend," says Gupta of Freescale. Audi recently introduced the MMI operating system that enables drivers to control various in-car functions using the MMI interface, touchpad to voice. With this tech, one can easily change and use various controls in the car just by a gesture. "Imagine how easy it is going to be to change your radio station or turn on the AC, all by just a gesture," says Gupta. He also speaks of Visteon's HMeye cockpit concept, presented for the first time at CES, which features a unique user interface controlled by eye gaze and head direction data, coupled with image attribute tracking.

***More updates.***

➤ In the last quarter of 2013, Google applied for a patent for a technology that helps control your car with hand motions. The system uses a ceiling-mounted depth camera and a laser scanner to understand the user's gestures and hand movements and initiate actions accordingly. For example, you could swipe near the window to roll down the glass, or wave your hand up to raise the volume on the radio.

## My car, my safe haven

While navigation, driver assistance and entertainment are all wonderful, it is the safety and security aspects of today's cars that are most intense. Actually speaking, the telematics systems like car-to-car connectivity and most new features do have a positive impact on safety, except, perhaps the on-board entertainment and features such as hands-free texting, which could distract drivers.

Features introduced by GM in its cars, in association with OnStar, have gained quite some repute in this segment. Advanced telematics has been used to implement a comprehensive automatic crash notification and security system with features like remote vehicle diagnostics, turn-by-turn navigation, the ability to slow down stolen vehicles and the ability to call a helpline when in danger.

***More updates.***

➤ BMW has an interesting feature called run-flat tires, which helps you get to the nearest service centre when your tire is about to go flat. Sensors help predict such a situation, an indicator glows in the dashboard and the tire's special structure allows you to drive around 80 km at 80 km/hr to get help before the boom!

## My car, my mechanic

From the tires and door to the powertrain, most parts of the car are fitted with sensors and electronic control units (ECUs) today.

Apart from better control and management of the vehicle, the electronics also help in online diagnostics. "We connect to the heartbeat of the car every day to check how it is doing and with that we are not only talking about diagnostics but also prognostics, or knowing the problem even before it happens. This creates a paradigm shift in the relationship between the customer and the manufacturer, creating a new ecosystem of convenience for the customers," says Maini.

## Smart Tips to Design a Hybrid/Electric Vehicle

Wensi Jin, automotive industry manager, MathWorks shares his thoughts on the top three design considerations that engineers should keep in mind while designing hybrids and EVs. He has wide experience in this space as MathWorks' solutions are used by industry majors such as Tesla, GM, ATB Technologies and Dongfeng Motor Corporation.

***Carry out design optimisation from the vehicle level and down.*** After decades of refinement, development of conventional vehicles tends to follow an evolutionary path. Making incremental improvements is the norm. Instead of new powertrain architecture, the focus is often to improve engine, transmission and other subsystems. In contrast, with hybrids and EVs comes a wide range of powertrain architecture options. The design space to be explored becomes much vaster. Once an architecture is selected (for example, range-extended EV with a gasoline engine as the generator), each subsystem needs to be sized based on the often-competing requirements such as performance, cost, weight and thermo. It is through this design process that hundreds of possible design choices are narrowed down to a few candidate designs, based on which prototype vehicles are developed. As it is impossible to test every design choice using prototype vehicles, simulation is deployed during architecture evaluation, subsystem sizing and other trade-off studies. Naturally, these simulations need to be carried out on the vehicle level, following predefined drive cycles. In other words, each vehicle model is 'driven' through a series of scenarios for the purpose of assessing their performance and other desired characters. The drive cycles or scenarios are anywhere from minutes to tens of minutes. Therefore design engineers need to create a proper balance in the level of details in the model in order to gain simulation speed. These simulations are usually run between near real-time and several times faster than real-time. Fast simulation speed allows design engineers to run hundreds of iterations for each design choice. At the same time, design engineers need to choose simulation tools that allow them to build up a vehicle level simulation model quickly, due to the number of design choices they have to evaluate.

***Master the battery, motor and energy management technologies.*** Hybrids and EVs are enabled by a number of subsystems that are not used in conventional vehicles, including advanced batteries as the main energy storage device, electric motors which provide power assist or propel the vehicle and an energy management system. There are many implications of adding these new technologies. First of all, automotive companies need to choose which technologies to develop in-house from ground up and which technologies to co-develop with partner companies. Second, regardless of the source of the new technologies, engineering talent needs to be in place to master these technologies so the new subsystems can be efficiently specified, designed and verified. For example, many automotive companies did not have in-house specialists in advanced batteries until recently. Now, these companies have several specialised teams for battery development. Third, with the new technologies and new engineers, development processes and tool chains need to be carefully defined and rolled out. This last point is particularly important on the engineering level. Due to the design complexity in advanced battery, electric motor and energy management systems, model-based design has become the de facto development method for these subsystems, including the embedded control software inside.

***Gain competency in embedded control software.*** Virtually every new subsystem for hybrids and EVs is controlled by embedded software. Unlike conventional vehicles, whose many subsystems are mechanically oriented, hybrids and EVs contain significantly higher electronics and embedded software content, which can add up to 35 per cent or more of the cost of the vehicle. Automotive companies that develop hybrids and EVs must develop internal competencies in embedded software, including the management of embedded software development and quality.

GM's OnStar and Hyundai's BlueLink are much appreciated remote diagnostic tools. Toolmakers such as Delphi and LandAirSea Systems provide plug-in remote diagnostic solutions, which connect to your car and to a cloud (through a wireless network) to provide a host of online diagnostic solutions to any car produced post 1996.

***More updates.***

➤ The number of ECUs in a car also means that these modern vehicles are at risk from hackers! In order to allay the fears of car users, Harman International Industries is busy developing a software security system that will protect at least the vital ECUs, such as the engine management system, from hackers, if not the infotainment aspects. The solution is expected to be in cars in the 2016-17 timeframe.

➤ Bosch recently demonstrated advanced MEMS sensors for applications such as skid detection, adaptive cruise control (ACC) and softer gear changing of automatic gearboxes. According to a presentation at CES, a modern car has at least 50 such MEMS sensors, which in turn are supplying data to the automotive cloud that supports drive assistance systems and telediagnostics.

## My vehicle, my conscience

The number of vehicles in the world is growing far too fast, leading not just to a depletion of oil reserves but scary levels of pollution as well. Car makers, with a due share of eco-responsibility, are introducing several energy management technologies in all new cars, as well as launching electric or hybrid models for a cleaner and sustainable future.

"In the last few years, there has been a significant focus towards advanced engine control systems to offer higher fuel efficiency (including hybrid technology) and near-zero emissions. The start-stop technology, which is still in a nascent stage, is one step in this direction," says Gupta. "Another interesting thing that needs to be done to ensure we get greater mileage and lower emissions than we are capable of today, is to make the cars lighter in weight. Experts suggest that one solution is to make body components of lighter materials such as carbon fibre-reinforced plastic (CFRP) or polymer. CFRP works much like fibreglass; the carbon fibre is spun into long strands and then arranged in a cloth-like weave for strength. The Z06 version of the Chevrolet Corvette already makes limited use of carbon fibre right from the factory."

Electric and hybrid vehicles are becoming quite popular, with Ford, Honda, Nissan, Toyota, Mahindra Reva and Renault being significant players in the market here. "Availability of higher capacity, 48-volt batteries, adoption of fuel cell vehicles and natural gas cutting into the electric truck market are some notable trends in this space," says Gupta.

Maini of Mahindra Reva points out that apart from the light-weighting efforts explained by Gupta earlier, another key development in the electric car space is related to battery technology. "A suitable way of storing energy with the space constraints in mind was the biggest challenge. If the weight of the battery is really high, most of the power generated will be used to carry the car's battery alone, hence considerably affecting the car's performance. However, the growth in the smartphone industry has caused battery technology to hit its peak on the learning curve. A lithium-ion battery pack can store energy for moving the car and at the same time be carried around on the car, tipping the balance at only 830kg for the entire

## MAJOR CONTRIBUTORS TO THIS REPORT

**Chetan Maini**
chief executive officer, Mahindra Reva Electric Vehicles Pvt Ltd

**Sanjay Gupta**
director-Automotive MCU Group, India Design Centre, Freescale Semiconductors India Pvt Ltd

**Tim Lau**
associate product line director, Automotive, Broadcom

**Vinay Piparsania**
executive director, Marketing, Sales and Service, Ford India

**Wensi Jin**
automotive industry manager, MathWorks

car (Mahindra e2o); now this is a feat achieved," he explains delightfully.

Apart from ongoing research on battery chemistries and battery management systems, Mahindra Reva is also working with CECRI, Karaikudi (a CSIR lab) to research on lithium-ion batteries that will help maximise battery life, optimise battery systems design, predict failures, etc.

Gupta, however, feels that despite EVs emerging as a major trend in the smart vehicles space, these are yet to be widely accepted due to dependence on infrastructure and policies around the same.

"Infrastructure has always been a chicken and egg problem for us. But, as we progressed along the learning curve, we have been able to solve the complicated equation by coming up with our own charging points at strategic locations. We are now at a point that we are working on a network of fast-charging stations so you can charge over a cup of coffee and move on," answers Maini. He also explains that EVs are for people with fixed and predictable travel patterns, so they can comfortably charge at home or office and sail through their needs.

"To reduce the anxiety in the EV users, we are already partnering with malls and retailers to build EV charging ports into their parking lots, but government support is important to build a critical mass of users and suppliers and smooth out current regulatory roadblocks in this space," he adds. For instance, we already have over 300 charge ports all over the country and are planning to extend it to other cities. We are hopeful that the new National Mission for Electric Mobility will help drive this. We can envision a not-so-distant future (it already exists in other parts of the world) where you can take your EV to a fast-charging station, get an 80 per cent charge in 15 minutes, and be off to your next destination."

***More updates.***

➤ A start-stop system is one that can automatically shut down and restart the internal combustion engine to reduce engine idling time and thereby fuel consumption too. Whilst this was initially popular only in cars with a hybrid electric powertrain, now it is being adopted in non-electric cars too.

➤ Recently, Toyota launched its FCV hydrogen electric vehicle, expected to come to market next year. In this innovative car, hydrogen and oxygen combine to create electricity and water so that a zero emission target can be achieved.

➤ Ford and Georgia Tech have together developed the Ford C-MAX Energi Solar, a hybrid vehicle that can charge its battery using a solar panel fitted on its roof. The car includes autonomous features (such as that used for parking) to follow the sun's movements and adjust the panel direction throughout the day. Ford claimed at the demo that a day's worth of sunlight will provide the same amount of power and performance as the plug-in variant of C-MAX Energi, able to return a fuel efficiency of 2.4 litres per 100km and a range of almost 1000km.

➤ Honda, the first to put a fuel cell vehicle (FCX Clarity) in the hands of consumers, recently unveiled its new Honda FCEV Concept sketch, a futuristic and aerodynamic design of its next-generation fuel-cell EV launching in 2015. This will be a step towards a zero-emission future. Honda's alternate energy range includes Accord Hybrid, Accord Plug-In Sedan, Honda Fit EV and the Civic Natural Gas.

➤ Another rather off-beat step towards environment-friendly technology is Honda Motor's agreement with TDK Corporation and Japan Metals & Chemicals to work towards the reuse of a rare earth metal extracted from nickel-metal hydride batteries in hybrid vehicles for magnets of new hybrid vehicle motors. This will reduce the environmental footprint of mobility.

## My car, my future

Technologies abound, for easier, safer and more sustainable mobility. However, everything is not good. As scientists always believe, a technology is to be evaluated more by its impact on society than the technological merits. Cars are easier to drive, good news! But, I live next door to a school and am startled by the increase in the number of moms dropping individual kids in cars, because they are easier to drive and park than two-wheelers! Where are the days when most kids used to travel by bus or cycle to school? How are we going to manage fuel availability and pollution in the near future? By the time hybrid and electric cars hit a mass-market pricing and are widely adopted, will not greater harm be done than good?

Hands-free messaging, complete integration of wearable tech and smartphone apps with car dashboards and in-car media centres are all very snazzy, but a recent *Scientific American* article shows that hands-free texting is still not safe as it distracts the driver. Will driver assistance features be powerful enough to avoid accidents caused due to distraction?

Tech is a good thing, but for it to be sustainable, users need to exercise their prudence too, than being carried away by all that seems good! ●

*The author is a technically-qualified freelance writer, editor and hands-on mom based in Chennai*

# Renesas Discrete, Power and Standard Products

As the world's number one supplier of microcontrollers, Renesas enables you to build smarter solutions into your products. With a quality lineup of analog and power devices that support high levels of integration, you can now boost the competitiveness of your products with shorter development time, reduced cost and lower power consumption.

## ICs for DC/DC Converter

New!!

**Wide Input voltage range up to 30V**

- 1 to 4 channels converters
- Ultra low power mode at standby
- On-chip output power MOSFETs
- Built in features like power sequencing, auto PFM, battery backup, phase compensation components and discharge circuits built-in

## IGBTs

**600V to 1350V Discrete Devices**

- Reduce Switching losses - improved both Vce sat & Fall time (tf)
- Long short circuit resistance time 5 usec & 10usec
- Guarantee high temperature 175°C

## Power MOSFETs

**40V to 600V in Application Optimized Processes**

- Low Rds(On) Performance
- Various package available

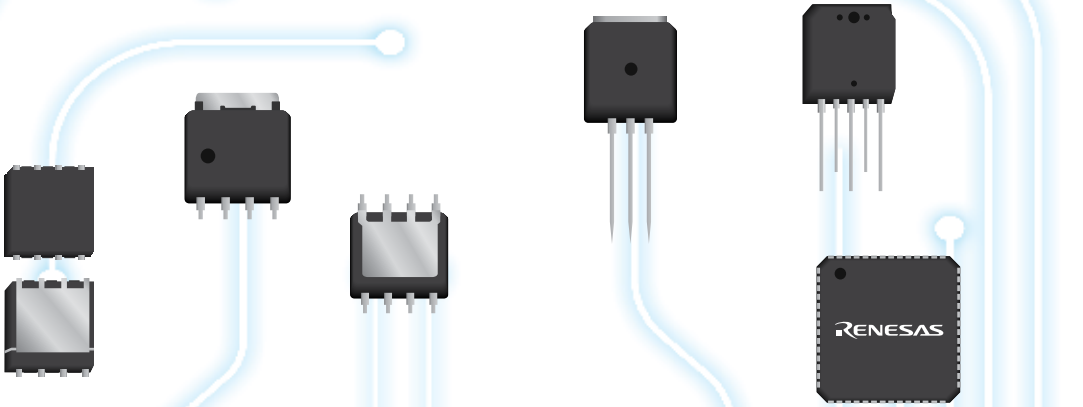


## Thyristors and Triacs

**Planar technology, high temperature & high reliability**

- Broad line up of package and devices
- Current carry capacity from 0.8A to 30A
- Voltage tolerance from 400V to 1500V
- Junction temperature to 150°C

## Diodes

**Fast Recovery and Schottky Barrier**

- 600V FRD optimized to 23ns trr
- 600V SBD optimized to 1.4V Vf
- Low VF, high-speed performance & ultra-high speed switching

Join us on Facebook
www.facebook.com/RenesasSingapore

Renesas Electronics Singapore Pte. Ltd.

http://sg.renesas.com/india



RENESAS

# Automotive Electronics: Shifting Gears

The growing automotive industry and continuous technological developments have transformed our driving experience completely. With new electronic technologies and features in automobiles, the automotive electronics sector in India is poised to be one of the fastest growing markets in the world

**PANKAJ V.**

Today cars are equipped with unprecedented number and type of features and gadgets. The replacement of mechanical parts by electronic and mechatronic parts has boosted the automotive electronics industry.

Electronic components in high-end vehicles make up more than 30 per cent of the production cost, and this is expected to rise further. The auto components industry in India is likely to reach a turnover of US $115 billion by 2020-21 from the existing $40 billion, and at the same time components export could cross $30 billion from the current $10 billion. But these could include non-electronic components as well.

Electronics manufacturing is expected to catch up in India and this could enable the industry to meet dynamic and modern requirements, especially in the automotive domain. Our domestic market is attracting original equipment manufacturers (OEMs) who have a strong need for localisation and the recession-affected global markets are hunting for low-cost vendors to optimise their operations. This could make India one of the fastest growing automotive markets in the world, offering substantial growth opportunities for the various manufacturers.

Also, according to IMS Research. "The global market for automotive electronics is set to rise to $240 billion in 2020, up more than 50 per cent from $157 billion in 2010, driven to new levels of prominence by government and automaker safety initiatives." Where is this growth coming from?

## Growth factors

Electronics industry has taken giant leaps in the last few years and, at the same time, it has contributed to the growth of automotive industry as well. Importantly, the main factor for the growth of automotive electronics in Indian market has been the technology absorption rate, which has increased manifolds in the recent years.


*Mahindra Reva e2o electric car*

When we look at our current scenario, the technology absorption rate is very high as compared to earlier times. In terms of various technologies available, we are almost at par with the rest of the world. This fast absorption of technologies has resulted in the simplification of designing processes, reduction in manufacturing costs and at the same time increasing features and safety in automobiles. Thus, electronics in automobiles is now the main focus amongst automakers as well as consumers.

The following are some of the key areas which automotive brands state to be the biggest growth factors of electronics in automotive.

***Reduced costs.*** Properly designed and implemented, electronics can reduce cost while increasing flexibility and reliability. Electronics can define its role in reducing production cost, increasing product quality, meeting tighter standards and customising vehicle features, all within shorter business cycles, which is driving the increased focus on the role of electronics within the automakers.

***Selling features.*** The smartphone era has created a huge automation and assistance demand amongst the consumers in almost every sphere, and automotive is no exception. These electronics innovations have become an essential selling feature for the automobiles. Technologically advanced engine management, safety systems, infotainment and driving assistance are the main drivers of growth for the automotive electronics market.

***Safety.*** Safety requirement is another factor which has forced automotive industry to incorporate electronics in automobiles. According to the United Nations (UN), worldwide 1.3 million people around the world die in traffic accidents each year, and 50 million are injured. The UN has thus announced 2011-20 as the 'Decade of Action for Road Safety' with the objective to reduce the forecast number of road deaths by 50 per cent.

One of the five pillars that the UN has described for this project is 'safer vehicles.' This has driven the industry to focus on the crash avoidance tech-

nologies such as the electronic stability program (ESP) and antilock braking system (ABS) in commercial vehicles, cars and motorcycles.

***Electromobility.*** Electric cars are cleaner, less noisy and more efficient than the traditional fuel vehicles but were not accepted in the past. Now, a new age of electromobility is dawning, offering great opportunities and possibilities. This rapid advancement of green technology in the form of hybrid and electric vehicles (EVs) has taken the use of electronics to a whole new level. The increased powertrain complexities in these vehicles rely on the sophisticated electronic controls to achieve maximum efficiency and reliability.

**TABLE I**
**Exports**

| Segment | Sales (Apr-Dec, 2013) |
|---|---|
| Passenger vehicles | 8.49% |
| Three wheelers | 16.13% |
| Two wheelers | 4.65% |
| Commercial vehicles | 12.59% |

## Market challenges

The car of tomorrow will make even more increased use of sophisticated, highly integrated electronic systems for safety, comfort and performance. Major challenges faced by the industry come from outside the traditional automotive areas. Consumer innovations at automotive quality, security and driving assistance systems present new opportunities and significant challenges.

***Supply chain needs to improve further.*** Use of electronic systems enables many exciting areas of development but at the same time introduces a significant complexity issue which can only be addressed by a supply chain that works more effectively together. This presents all manufacturers with an opportunity as well as a challenge to streamline the process and accelerate innovation from R&D to on-the-road production vehicles.

The push towards the autonomous and smart cars has presented new challenges for all parts of the automotive supply

**TABLE II**
**Domestic Sales**

| Segment | Sub-segment | Sales (Apr-Dec, 2013) |
|---|---|---|
| Passenger vehicles | Cars | -4.92% |
| | Utility vehicles | -4.39% |
| | Vans | -15.06% |
| Commercial vehicles | Medium and heavy commercial vehicles | -26.92% |
| | Light commercial vehicles | -13.90% |
| Three wheelers | Passenger | -10.38% |
| | Goods | -4.37% |
| Two wheelers | Scooters | 19.89% |
| | Motorcycles | 2.48% |

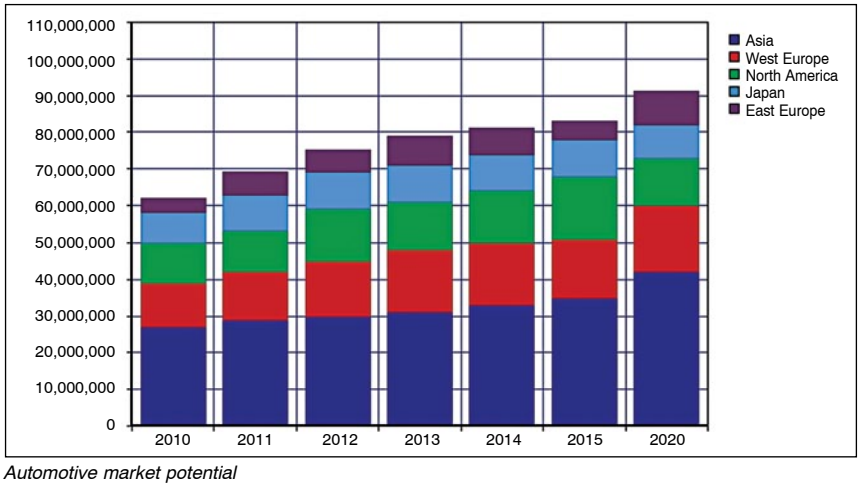


*Automotive market potential*

chain, from the OEM to the semiconductor vendor and IP provider. Expert collaborations from inside as well as outside the automotive electronics systems industry will be required to solve the security, user interface and system availability challenges for such autonomous cars.

***Lack of purchasing power.*** EVs are again gaining popularity now, but not without any challenge. The main problem is the people's perspective for these vehicles and also the fact that these cost more than the normal cars. There seems to be no reason to switch from normal to electric cars even if they have benefits for the future. However, there are some design houses who have come up with new designs which can change the way the people traditionally think about EVs by creating a whole new different section for these cars.

***Legal challenges.*** Simran Kaur, head of sales, Speedways Electric says, "As we look at the trend of the EVs in India, we find that we have almost no choice as there is either one or two models available which look like traditional cars. So what is that would make people switch from normal cars to electric cars, agreeing to the fact that the EVs cost more than the normal cars. So we are trying to change the way the people traditionally think about EVs."

But that again poses the legal challenges for such concepts. "The major issues with these type of vehicles is the approval to get them running on roads because there is no such category provided by the government, and the category provided is that of traditional cars where they do not have any concept of future vehicle," Simran adds.

***Challenges faced by design houses.*** The major challenges in incorporating electronics in an automotive are the harsh and tough operational conditions. The automotive electronics faces much tougher operating environment as compared to consumer electronics, especially due to the vibrations and the temperature conditions such as electronics located close to the engines. Here you have to ensure that the electronic components are fully reliable and withstand high temperature and humidity conditions.

With more and more electronics incorporated in an automotive, the power capacity is increasing and therefore cooling has become one of the biggest challenge with automotive electronics. The device sizes are decreasing and the automobiles have to be lighter, so traditional cooling techniques are no longer useful; one needs to come up with new techniques.

Another important thing is the electromagnetic aspect because having a lot of electronic circuitry in the automobiles will involve electromagnetic interference as well as compatibility. Having a lot of high-frequency devices in cars for communication can cause interference between those devices that may lead to problems. Therefore it poses a challenge before the designers who need to have a clear electrical as well as electromagnetic modelling.

## Measures taken by the government

Automotive electronics has evolved as electronics industry has made huge strides first. Electronics industry is growing in India but still most of the required electronics have to be imported, as there are no chip manufacturing companies in India. This increases the cost which is always an important factor in developing markets such as India.

The government of India has been encouraging and promoting investments in electronics systems design and manufacture (ESDM). It has taken several initiatives for the development of electronics sector in the country. The government has recently approved National Policy on Electronics (NPE). The objective of the NPE is to achieve a turnover of about USD 400 billion by 2020 involving investment of about USD 100 billion and employment to around 28 million people.

It will include achieving a turnover of USD 55 billion of chip design and embedded software industry, USD 80 billion of exports in the sector. Moreover, the policy also proposes setting up of over 200 electronic manufacturing clusters. Another important objective of the policy is to significantly upscale high-end human resource creation to 2500 PhDs annually by 2020 in the sector.

## An ever-growing industry

With all the drivers' assistance and safety systems and special utilities, automotives are also becoming more smart and intelligent. Owing to the endless number of demands by the consumers, the industry is ever growing and the major growth is expected from the emerging economies such as India.

Being one of the key drivers of the automotive industry and the rising demands on innovation, solutions, cost, supply chain and services leading its way forward in the Indian market, we can see the automotive electronics shifting its gears in the automotive industry. ●

*The author is a technical journalist at EFY, Gurgaon*

### Auto industry needs support

Last year, the overall growth in the auto industry was not promising enough. Overall automobile exports grew by 6.08 per cent during April-December 2013. But if we look at the overall domestic sales last year, it grew by a margin of only 2.30 per cent because of growth in two-wheelers' sales with overall passenger vehicle segment having a negative growth of (-)5.72 per cent and commercial vehicles were also sidelined in the market with a de-growth of (-)18.38 per cent. While three-wheelers' sales declined by 9.31 per cent last year, the domestic sales were somehow upholded and supported by a positive growth of 5.40 per cent in the two-wheeler segment.

The auto industry went through a rough time last year registering an overall growth of only 2.15 per cent as compared to the previous year's statistics, and this growth was all due to the growth in two-wheelers section. The automakers are hopeful that the improvement in our economy and innovations in the field of automotive electronics together might turn the numbers for them.

# Automotive Electronics

With the advancement of technology, electronics has become an integral part of automotives. This month we introduce a few websites that will help you explore the role and use of electronics in vehicles

## cvel.clemson.edu

The Clemson Vehicular Electronics Laboratory (CVEL) conducts targeted research related to automotive and aerospace vehicle electronics including electronic components, circuits, sensors, communications and power distribution with an emphasis on system integration, electromagnetic compatibility and modelling. The website is a rich resource for learning on these topics. It has details of electronics systems for automobiles.

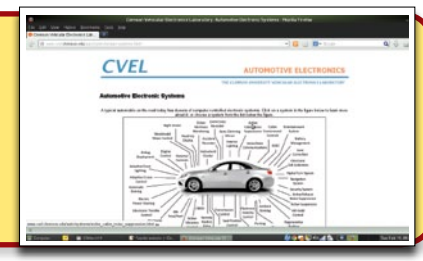


http://www.cvel.clemson.edu/auto/index.html


## automotive-electronics.co.uk

The site is a resource for news and technology for vehicle electronics design. It has a section on technical articles along with industry news and new products. It is a good resource for people who want to keep themselves updated on automotive electronics. The site is maintained by MT Publications Ltd, an organisation based in the United Kingdom.

http://www.automotive-electronics.co.uk/

## infineon.com

Infineon is the world's second largest chip supplier to the automotive industry. They manufacture innovative semiconductor products. The site works as a learning centre for available electronics products for the automotive industry. It has an e-learning platform and videos section which is useful for people interested in automotive electronics.

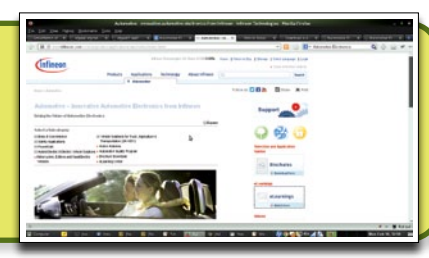

http://www.infineon.com/cms/en/product/applications/automotive/download-eLearning.html


## electronicdesign.com

The site is a part of the Penton Electronics group. The Penton group is the electronic design engineers' source for design ideas and solutions, new technology information and engineering essentials. Electronic design has a section for automotive technology trends, products, industry news, new applications and articles on automotive electronics.

http://electronicdesign.com/markets/automotive

## openautoalliance.net

The Open Automotive Alliance is a group comprising technology and automotive companies who have come together to bring the best of Android into the automobile in a safe and seamless way. The website is one place to know who, why and what about open automotive alliance.

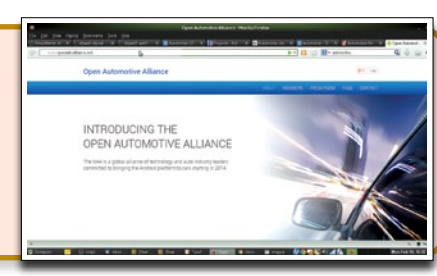


www.openautoalliance.net

# "With standard Ethernet, you can re-flash the car in minutes compared to hours"

There are multitudes of networking technologies available, but very few are future-proof for the technological advances that lie ahead. How do you select the perfect solution?

Michael Jones, product marketing director, Micrel, speaks to Dilin Anand and Sneha Ambastha about standard Ethernet for automotive systems, and why it could soon rule the pack

MICHAEL JONES
PRODUCT MARKETING DIRECTOR, MICREL

**Could you give us a primer as to how important Ethernet is to electronic systems in the automotive industry?**

Ethernet has already been widely accepted by the automotive industry as the preferred interface for on-board diagnostics (OBD) and has been deployed in various car models since 2008. Ethernet provides increased bandwidth speeds over traditional automotive buses, resulting in a reduction in software download times from hours to minutes compared to traditional methods. This adoption of Ethernet has already been standardised in ISO 13400 diagnostics over IP, using Ethernet as the physical layer.

Following success in diagnostics, the industry is looking at Ethernet to provide next-generation solutions for advanced driver assistance systems (ADAS) and in-vehicle infotainment (IVI). ADAS constitutes one of the fastest growing applications within the automotive market, driven by government legislation and a desire for enhanced in-vehicle safety.

**Could you give us an example of which specification suits which application the best?**

The needs of vehicle infotainment systems (and ADAS) differ from the current applications, such as OBD in that these are applications operating in real time whilst the car is moving. The original Ethernet IEEE802.3 specification was not designed for real-time applications; however, recent Ethernet audio video bridging (AVB) standard addresses the need for real-time A/V applications.

IEEE AVB specifications provide the necessary guaranteed quality of service (QoS) for such AV streaming applications in the car, the home and for professional AV equipment. The standard comprises three key specifications:

1. IEEE 802.1as time synchronisation
2. IEEE 802.1Qat stream reservation
3. IEEE 802.1Qav queuing and forwarding for AV bridges

**Could you elaborate on these three specifications?**

Time synchronisation is critical in order to ensure quality audio and video streaming within an Ethernet network. IEEE 802.1as utilises specific precise time protocol (PTP) packets to provide synchronisation across the network to a common system clock source. Nodes in the network, known as time-aware bridges, will extract timing from the network based on a series of PTP synchronisation message exchanges with the master clock source and neighbours. As a consequence, audio and video sources can be synchronously streamed across the vehicle network.

IEEE 802.1Qat stream reservation allows network bandwidth and buffer resources to be reserved for specific traffic schemes using stream reservation protocol (SRP). This ensures a guaranteed QoS for A/V and high-priority traffic, preventing any packet loss or significant network delay during periods of congestion. IEEE 802.1Qav queuing and forwarding methods are based on segregating traffic into isochronous (time critical) and asynchronous (non-time critical) packets and prioritising using the priority class defined in IEEE 802.1p. A credit-based traffic shaper is defined to smooth the 'bursty' nature of video data.

**The bandwidth in case of Ethernet would increase to 100Mbps per node or even 1Gbps. What has led to this increase? Is it due to different topologies?**

It is partly due to the topology of next-generation networks and also the increased bandwidth of applications such as video—high definition for infotainment and camera imaging for driver assistance, for example, rear-view, lane departure, signpost, traffic light and pedestrian recognition.

Next-generation vehicle networks will take advantage of the additional bandwidth, for example, GigE offered by Ethernet to provide a high-speed backbone in the car connecting various domains.

**What is the 'best master clock' algorithm and how does this affect the AVB system?**

For IEEE 802.1as time precision protocol (PTP) each network node (slave) is synchronised to a master clock in the network. The best master clock mechanism is a way to select

the best clock in the network to become the master—typically a GPS signal but could be any clock. If the master clock 'dies' then the next best clock in the network is selected as master. For automotive networks, it is likely that the BMCA will not be used and the master/slave configuration of each node will be fixed.

**Q What are the major benefits of using standard Ethernet in automotive systems?**

Standard Ethernet can provide complete network ubiquity across automotive applications. One of the major benefits of standard Ethernet is the economies of scale across mass markets deploying Ethernet, providing lowered total cost of ownership. Standard Ethernet devices can be used in automotive, that is, the same silicon used for automotive Ethernet devices will also be utilised in all other Ethernet markets, such as, enterprise, telecom, digital home and industrial.

**Q What key requirements exist for automotive applications?**

One of the key requirements for automotive applications when the car is moving (unlike diagnostics in a garage) is the need to meet OEM EMI limits over unshielded cable, which is preferred by automotive OEMs to reduce cable costs and ease installation.

**Q How can an engineer improve the data security of an automotive Ethernet-enabled system?**

Micrel being a silicon vendor focusses primarily on this from the low level (physical/device layer). There are various security features within Ethernet, such as, virtual LANs that can be implemented within the same physical network by tagging packets. Here we can create various virtual networks within one physical network. For instance, in diagnostics, even though it is physically connected to the rest of the car, when we plug in to the diagnostics, these would be blocked from any forbidden access and only certain devices can be accessed.

**Q Can we compare standard Ethernet with CAN and Flexray?**

Today we cannot compare Ethernet directly with CAN. It will be a number of years before Ethernet is considered to replace CAN interfaces. CAN, whilst it is cheap, can only support low bandwidths, typically less than 1Mbps.

**Q What alternatives exist for standard Ethernet?**

For infotainment networking, one of the alternative technologies is MOST, originally offered by SMSC, now acquired by Microchip. The major drawback with MOST technology is that, although it is an open standard that can be licenced, there is only one major supplier and it is limited to automotive applications only. One of the concerns with such reversed engineered vendor standards is the interoperability.

MOST is also limited in the available bandwidth due to speed and network topology. Here a maximum of 150Mbps must be shared across all network nodes in the necessary ring topology, whereas Ethernet can provide 100Mbps, 1Gbps or even greater per node, irrespective of network size.

**Q What are the top reasons for an engineer to switch to standard Ethernet?**

In any application, irrespective of market, standard Ethernet provides the lowest total cost of ownership for high-bandwidth communications.

The modern car of today may comprise one hundred or more microprocessors, each requiring programming. Using traditional method over a CAN bus will take hours to re-flash such a car, resulting in a major cost to the car manufacturer. The increased bandwidth provided by Ethernet reduces this time to mere minutes and can be 're-programmed whilst you wait'—connected to a standard PC or laptop.

The key to the success of standard Ethernet and the benefits it brings to any network is the true open standardisation of IEEE 802.3.

**Q What differs between standard Ethernet and the competing BroadR-Reach?**

BroadR-Reach technology, developed by Broadcom, was a proprietary PHY layer device designed for extending the reach of 100Mbps Ethernet data. Originally, it was perceived by the industry that it was not possible to meet automotive emission limits utilising standard Ethernet over unshielded twisted cable, which led to the interest in alternative possible technologies, such as BroadR-Reach. However, Micrel and other suppliers have since demonstrated to the industry this to be achievable with standard Ethernet. Unshielded cable is highly desirable for car manufactures to reduce cost and ease installation.

BroadR-Reach uses additional signal processing, similar to gigabit technology, although not interoperable consuming additional power. In addition, only standard Ethernet can support other IEEE standards such as IEEE802.3az energy-efficient Ethernet, whereby, during idle periods, the transceivers can fall back into a low-power sleep mode reducing power consumption by an additional 50 per cent or more. Standard Ethernet provides another major benefit with support of IEEE802.af/at power over Ethernet. Here a remote device, for example rear-view camera, can be supplied power over the same cable as you send data.

Like our other comparisons, the major benefit of standard Ethernet compared to BroadR-Reach or any of the other alternatives is the true open standardisation of IEEE 802.3. The IEEE 802.3 Ethernet eco-system is mature, and proven, providing the design community with design, test and conformance specifications and a wealth of off-the-shelf test equipment solutions. ●

*Dilin Anand is a senior assistant editor at EFY, Bengaluru, and Sneha Ambashtha is a technical correspondent at EFY, Gurgaon*

# Automotive Electronics Industry Looks Good

In this story, we discuss the scope and opportunities in the field of automotive electronics, entry-level roles for freshers and skills expected of them. We also bring to you some suggestions from industry experts

**ABHISHEK A. MUTHA**

The last decade has shown that the electronics in automobiles have multiplied at an astonishing rate. Electronics pretty much influence all functionalities in a vehicle. Some of the reasons driving this trend are—precision, timing, efficiency, standards, safety, comfort, user experience and connectivity. Also, this is in-line with the insatiable desire for gadgetry amongst consumers.

"This trend will definitely continue, perhaps at a much accelerated pace. Automotive semiconductor sales will boom to $40 billion by 2014. It is estimated that close to 80 per cent of the innovation in automobiles will be in electronics," says Basavaraj Garadi, chief expert, Robert Bosch Engineering and Business Solutions.

Therefore there is no denial of the fact that the future of automotive technology lies in the hands of electronics, thus offering significant scope for professionals to grow and thrive in the automotive electronics industry.

*A view of Bosch Automotive Electronics India factory*

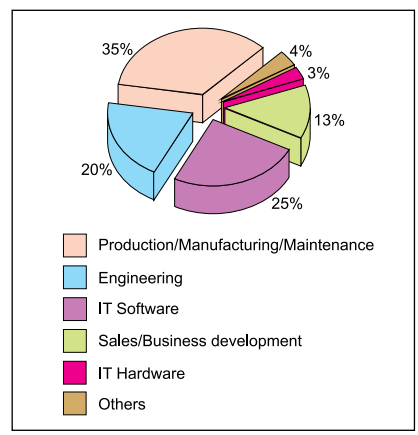


*Fig. 1: Share of top five functional areas hiring automotive electronics professionals (Data courtesy: TimesJobs.com)*

## Scope and opportunities

There are scores of Tier-1 and Tier-2 companies actively contributing to the booming electronics in the automotive industry. There are companies engaged in engineering activities, developing new electronic functions in the vehicles and there are also companies producing electronic control units (ECUs), which realise these functions in the vehicles. In addition to these companies are the ever-growing automobile manufacturers. Garadi adds that, "As per the current figures, SIAM—the Society of Indian Automobile Manufacturers, has 46 members who are the leading vehicle and vehicular engine manufacturers. All of these provide ample opportunities for employment to the fresh graduates passing out of universities."

Today's car is an extension of the smartphone with facilities such as Bluetooth integration, multimedia playback and routing, which opens up interesting career avenues in the industry. Garadi shares, "In fact we have been seeing frequent advertisements of car manufacturers showcasing the new electronics infotainment features at major events such as CES '14 in Las Vegas."

"There are huge opportunities in the automotive industry as it is leveraging the recent updates in the consumer electronics industry. We are currently witnessing a lot of consolidated CE technologies being moved into automotives," informs Ravindra B.S., lead architect, Mistral Solutions.

## Entry-level roles and training

For fresher engineering graduates, there are opportunities of working on car telematics, electronic car control and car communication with the outside world. With respect to the entry-level roles at Mistral Solutions, Ravindra says, "Entry roles can include maintenance, verification and validation of hardware/software developed using standard life-cycle models."

"Robert Bosch Engineering and Business Solutions Limited (RBEI) re-

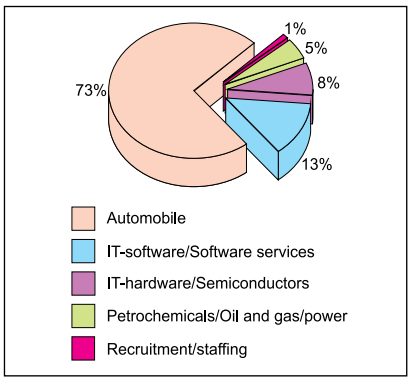


*Fig. 2: Share of top five industries hiring automotive electronics professionals (Data courtesy: TimesJobs.com)*

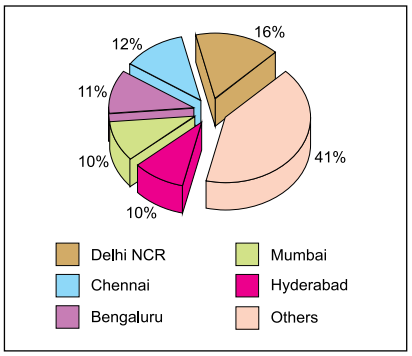


*Fig. 3: Share of top five locations hiring automotive electronics professionals (Data courtesy: TimesJobs.com)*

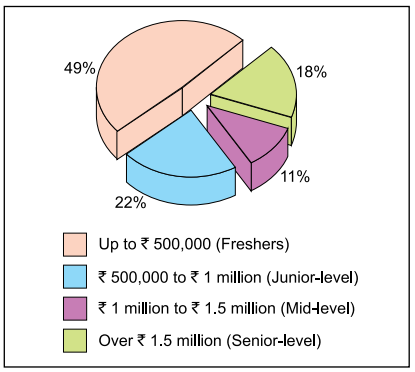


*Fig. 4: Salary breakup of automotive electronics professionals (Data courtesy: TimesJobs.com)*

cruited close to 700 fresh engineering graduates passing out of universities in the year 2013," informs Garadi. He says, "Almost all of them would be engaged in engineering activities—some involved in hardware design, some in the software design and the rest engaged in the mechanical design activities. There are also some engineers involved in relatively new but rapidly growing area—mobile apps development."

When fresh engineers come on board, they may operate as junior development engineers undergoing intensive training—the first month being spent on induction training when they get exposed to a common set of topics, especially dealing with automotives and the engineering processes and procedures.

Subsequently, they are assigned to different areas where they undergo on-the-job training for a few months in entry-level engineering tasks under the tutelage of senior engineers; each getting exposed to one specific area within the automotive technologies such as power-train, body electronics, active and passive safety and infotainment.

## Demand areas

Due to the nature of the work, most jobs are concentrated in the auto manufacturing hubs of Delhi, NCR and Chennai. While core engineering skills

## Major contributors to this report

- Basavaraj Garadi, chief expert, Robert Bosch Engineering and Business Solutions
- Ravindra B.S., lead architect, Mistral Solutions
- Vivek Madhukar, COO, Times Business Solutions Ltd (which operates TimesJobs.com)

are valued, softer skills of concept selling and relationship management are also required by the bigger OEM companies. Vivek Madhukar, COO, TBSL (which operates TimesJobs.com) explained, "Automotive electronics is a highly specialised field, and companies seek very specific profiles in this domain—offering high starting salaries and good career growth."

According to the data provided by TimesJobs.com, the top industries hiring verification and validation engineers form the core automobile electronics industry with about 73 per cent share of jobs, followed by the IT software/software services industry with a share of 13 per cent. IT-hardware/semiconductor and petrochemicals/oil and gas/power industries have 8 per cent and 5 per cent of the jobs, respectively.

Apart from Delhi and Chennai that feature in the list of top locations for jobs in automotive electronics field with 16 per cent and 12 per cent, respectively, Bangalore, Mumbai and Hyderabad compete with 11 per cent, 10 per cent and 10 per cent of the jobs, respectively. Remaining jobs are spread in other locations.

## Pay package

According to the stats provided by TimesJobs.com, 49 per cent jobs are for freshers with a pay package between ₹ 190,000 and ₹ 450,000 per annum. Twenty two per cent of the jobs are for professionals with at least two to three years of experience, who are paid between ₹ 500,000 and ₹ 1,000,000. Eleven per cent of the jobs available in India are for mid-level experienced professionals whereas the remaining 18 per cent of the jobs are for seniors in this industry.

As found on payscale.com, the average pay for an automotive engineer is ₹ 390,652 per annum. RBEI recruits mainly from Tier-1 and Tier-2 engineering colleges, and these cater to most of the software, hardware and mechanical design activities. The IITs and NITs cater to around 5 per cent of the annual requirement, and these engineers engage in tasks demanding high ability to solve core engineering problems by delving deep into engineering principles and designs systems through creative and innovative thinking.

Therefore, Garadi says, "Pay packages vary too much in the industry for any price point to be relevant. However, we can say that it is comparable to any other engineering domain."

## Skills expected

Modern-day industries, including automotive, demand multi-skilled engineers handy with both core engineering as well as IT engineering. This has led to the birth of a new branch of science, particularly popular in the automotive industry, called mechatronics. It is a combination of mechanical, electronics, control and computer engineering. Almost every subsystem in a vehicle is moving from a pure mechanical system to a mechatronic system. Garadi says, "Therefore future of the automotive industry lies in the confluence of multiple fields of engineering, and an engineer aspiring to score in the automotive industry has to be multi-skilled or, in other words, should be a mechatronics engineer."

Ravindra adds that, "For a fresher, we expect the person to be strong in communication standards, C/C++, microcontrollers and MEMs-based sensor technologies. Experienced graduates in this domain will need experience in developing hardware/software as per established standards of the automotive industry; hands-on experience in one or more programming languages and experience in building real-time operating system (RTOS) based products amongst others."

## Expert advice and suggestions

These days a big chunk of engineers recruited in the automotive domain broadly fit into the IT category. They write software code to solve real-world problems and implement systems. These software can run on desktop computers or on on-board computers (also referred to as ECUs). They deal with real-world data and signals, and interpret, analyse and process these to realise complex functions. Garadi explains that, "For these functions to be effective, efficient, accurate, repeatable and reliable, engineers have to apply mathematical, scientific and technological skills." They need sound theoretical approach for introduction of new ideas and concepts.

All of these amount to core engineering skills. IT engineers, in order to make a good job of what they are working on, should be in a position to understand, visualise and appreciate the engineering principles. More complex the systems are, deeper you may have to delve. Lest, the work-piece would only turn out mediocre. Garadi says, "For example, the engineers engaged in developing software for the vehicle exhaust management need to understand the principles behind chemical processes, fluid dynamics, thermal engineering, etc. Likewise, engineers writing software for the engine management systems would do well to have basic engineering skills associated with combustion, kinetics, kinematics, traction, etc."

On another note, Ravindra says, "For people interested in the field of automotive electronics, there is currently a lot of excitement with several new technologies being developed and integrated into future automotive devices. It is important that the graduates be strong in fundamentals of communication software engineering since the product developed will ultimately go into a vehicle, and this involves the safety of the people on board."

*The author is a senior technical correspondent at EFY, Bengaluru*

# Software in This Month's DVD

This month's EFY Plus DVD brings you a useful FPGA CAD tool, tools for embedded software development and VHDL simulation, FSM designer and a timeline diagram editor for your utilities collection

**PANKAJ V.**

## Weka

Methods of machine learning help in analysing large data and decide about the most relevant information. Weka provides you with a collection of such machine learning algorithms for solving real-world data mining problems.

This tool is written in Java and can be run on any platform. You can directly apply these algorithms to a dataset or use your own Java codes to call them. Weka is well suited for developing new machine learning schemes and contains tools for data pre-processing, classification, regression, clustering, association rules and visualisation. ***Supported OS:*** *Windows, Linux, MacOSx* ***Link:*** *http://sourceforge.net/projects/weka/files/*

## BeRTOS

BeRTOS is a real-time open source operating system that comes with drivers and libraries designed for the rapid development of embedded software. BeRTOS is a free tool with no licence costs or royalty, allowing you to cut the economic investment for your products. This multi-platform tool can be useful for building commercial applications with its modular design, which allows running it on different architectures, ranging from tiny 8-bit microcontrollers such as the Atmel AVR to the 32-bit ARM architecture.

Its pre-emptive multitasking kernel implements many IPC primitives. And there is a hardware abstraction layer which includes a large number of peripheral drivers (timer, serial, ADC, motors, LCD display, NTC sensors, keyboard, buzzer, memories), algorithms (hash table, CRC, MD2, entropy pool, RLE), communication protocols and a graphic windowing sub-system for small displays. ***Supported OS:*** *Windows, Linux, MacOSx* ***Link:*** *http://download.bertos.org/release/*

## GHDL

GHDL is an open source VHDL simulator. It is not a synthesis program, that is, one cannot create a netlist using this tool but it can execute almost any VHDL program. It uses the GCC at the back end and directly translates a VHDL file to machine code without using an intermediary language such as C or C++. ***Supported OS:*** *Windows, Linux* ***Link:*** *ghdl.free.fr/*

## KJWaves

KJWaves is a cross platform SPICE tool written in Java. You can have easy modification and viewing of SPICE circuit files with this program. This program can read SPICE3 RAW format (as well as GnuCap) and create graphs of results through an interactive GUI with features such as support for waveform math, copying to clipboard and saving. ***Supported OS:*** *Windows, Linux* ***Link:*** *http://sourceforge.net/projects/kjwaves/*

## QFSM

Finite state machines (FSMs) are a model to describe complex objects or systems and can be used to design integrated circuits or to create regular expressions, scanners or other program code. QFSM is a graphical editor for FSMs which is written in C++. It can be used for easy drawing, editing and printing of diagrams. You can create your own VHDL test codes and have interactive simulations using QFSM. It supports HDL exports in different file formats, such as, AHDL, VHDL, Verilog HDL, KISS and diagram exports in EPS, SVG and PNG formats. ***Supported OS:*** *Windows, Linux* ***Link:*** *http://sourceforge.net/projects/qfsm/*

## RapidSmith

RapidSmith is an open source EDA tool. This FPGA CAD tool framework is written in Java for modern Xilinx FPGAs. It is based on XDL (Xilinx design language) and provides interactive graphical tools for Xilinx XDL/NCD designs. It can be used as a rapid prototyping platform for research ideas and algorithms relating to low-level FPGA CAD tools. ***Supported OS:*** *Windows, Linux, MacOSx* ***Link:*** *http://sourceforge.net/projects/rapidsmith/*

## Timing Editor

Timing editor is a simple tool for drawing and editing timeline diagrams. It allows you to draw signals, clocks and busses, set length of a tick and number of displayed ticks, set transition in percentage of a tick and also set time compressions. This windows-based easy-to-use tool also allows you to undo or redo your steps, save and open your diagrams and export them to PNG, SVA or PS formats. ***Supported OS:*** *Windows* ***Link:*** *http://sourceforge.net/projects/timingeditor*

## PIC Simulator IDE 6.96

PIC Simulator IDE is a powerful application that supplies PIC developers with user-friendly graphical development environment for Windows with integrated simulator (emulator), basic compiler, assembler, dis-assembler and debugger. ***Supported OS:*** *Windows* ***Link:*** *http://www.oshonsoft.com/downloadspage.php* ●

*The author is a technical journalist at EFY, Gurgaon*

# PIC Simulator IDE 6.96

**A Windows-based shareware for the simulation of PIC microcontrollers. It provides users with a powerful, easy-to-operate and quick processing environment**

**ANAGHA P.**

PIC Simulator IDE is a powerful tool that assists simulation of PIC family of microcontrollers. It provides developers with a rather simple, comprehensive, user-friendly graphical user interface (GUI) for Windows. This tool also provides users with features such as integrated simulator (emulator), Basic compiler, assembler, disassembler and debugger.

Currently, this program offers full support to the 57 microcontrollers from Microchip's PICmicro 10F, 12F and 16F series. These models are listed in the table on page III. Some of the microcontroller models are provided with only limited support. It does not back some high-level functionalities such as AllDigital, Adcin, Read, Write, Hseropen, Hserout, Hserin, Hserget, Count, PWMon, PWMduty and PWMoff statements. But all the other basic compiler elements are fully supported. Another limitation is that, only Digital I/O is simulated for these models. The microcontrollers with limited support are listed in the table.

## Features

The main simulation interface of the program shows the internal architecture of microcontroller. It has several functionalities such as EEPROM data memory editor, FLASH program memory editor, hardware stack viewer, variable simulation rate, simulation statistics, PIC assembler, an interactive assembler editor for beginners, PIC disassembler and configuration bits editor.

The powerful PIC Basic compiler with smart Basic source editor features the three basic integer data types (1-bit, 1-byte and 2-byte), and optional 4-byte that supports 32-bit arithmetic. The program bundles various simulation modules and interfaces, and also offers support for external simulation modules. It provides breakpoints manager for code debugging, along with breakpoints support.

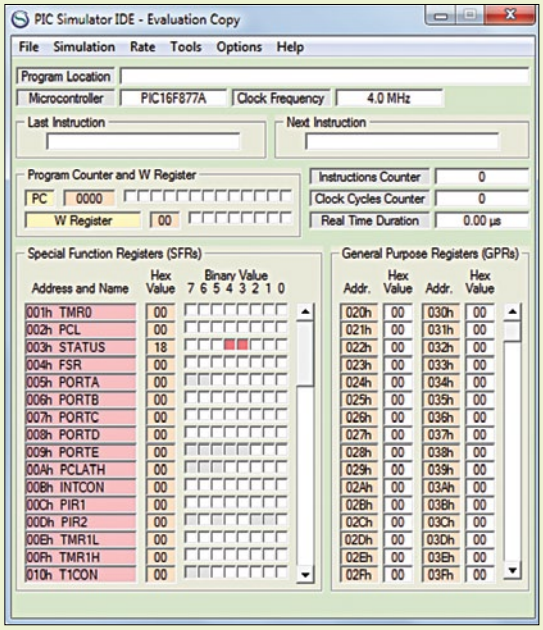


*Fig 1: Home screen*

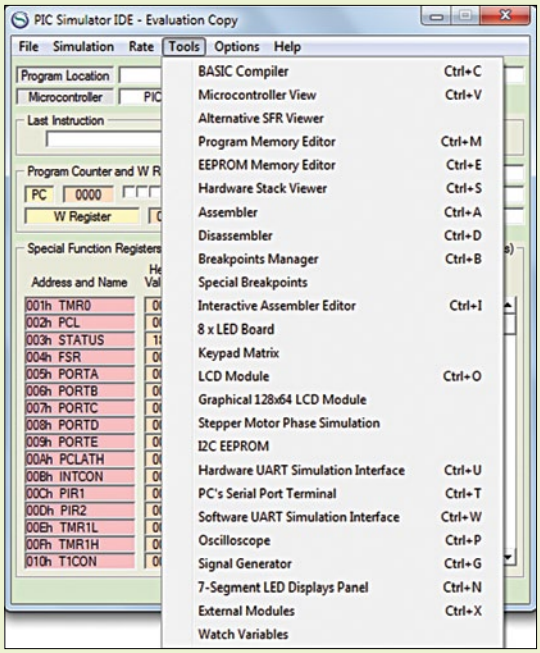


*Fig 2: Tools menu*

PIC Simulator IDE is provided with PC's serial port terminal for proper communication with real devices connected to serial port. It has extensive program options, and even colour themes to customise the appearance. All these factors make this tool simple, interesting and user-friendly.

## Installation

Windows Vista, Windows 7 and Windows 8 users: After installing the setup file picsimulatoridesetup696.exe, when you run the program for the first time, right-click on the application shortcut in Windows Start menu (or on the executable file picsimulatoride.exe) and choose the option Run as administrator. Else, an error message would be displayed, which reads: Unexpected error; quitting.

This needs to be done only for the first time the

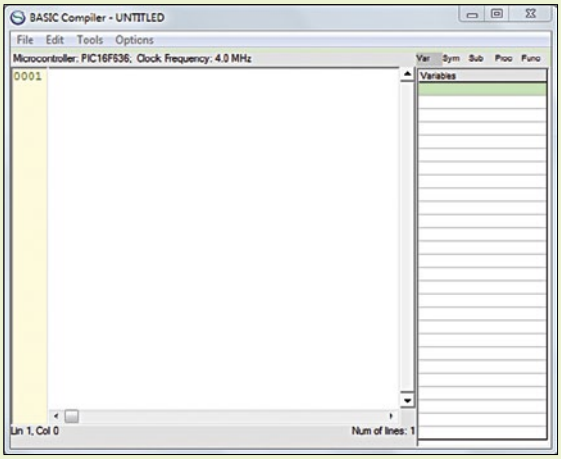


*Fig 3: Basic compiler*

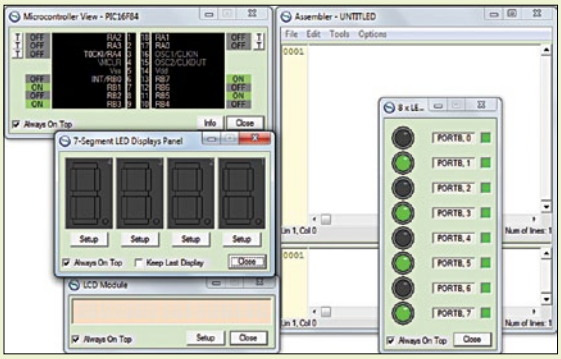


*Fig 4: Modules and interfaces*

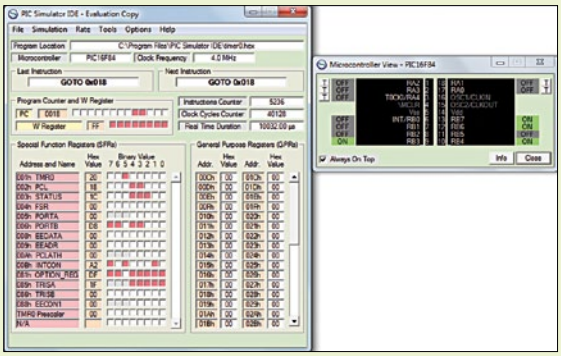


*Fig 5: Timer*

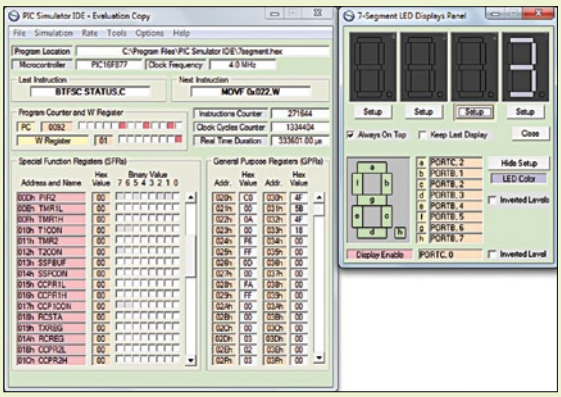


*Fig 6: 7-segment LED*

program is opened. From next time onwards, the file can be opened as normal by clicking the shortcut in Start menu or double-clicking the program file using left mouse button and the program gets launched.

The default storage location of program files is the PIC Simulation IDE subfolder in Program Files folder. Some example files to work with are stored in this subfolder. Modifying these files requires admin rights, without which the error message "Run-time error '75': Path/File access error" appears. It also contains three manuals for the users: for getting started, compiler reference and for external modules. Modifying files stored in Program Files folder requires admin rights.

To permanently set the program to run with administrator privileges, right-click on the program icon, select Properties, click on the button Advanced and tick the Run as administrator check box. Administrator rights are not required if the project files are stored in a user private folder (for example: My Documents.)

## Getting started

The main window (refer Fig. 1) shows the location of the program being executed, name of the PIC selected, clock frequency, mnemonics of the instruction last executed and the one about to be executed, instructions and clock cycles counter, real-time duration of the simulation and the statuses of internal registers.

The File menu has options to load a program to the PIC memory, clear memory and save memory. From the Simulation menu, you can start or stop a simulation, execute the next step of simulation (when Step By Step simulation rate is selected), or run to the next Basic statement for programs generated by integrated Basic compiler. The user can set the simulation rate to Step By Step, Slow, Normal, Fast, Extremely Fast, and Ultimate from Rate option in the menu bar.

The Tools option (Fig. 2) gives a variety of modules and interfaces to choose from. Basic compiler opens the integrated Basic compiler editor window, as shown in Fig. 3. The Basic Compiler Reference Manual in Help menu of main window (or Options of Basic compiler editor window) contains more information on this module.

The Assembler command starts integrated assembler. In this window, the assembler source files can be edited and assembled. A similar Disassembler option starts disassembling automatically when this option is selected. Once the operation is complete, the output file is displayed and the user is prompted to save it.

Other main modules and interfaces include Microcontroller View, EEPROM Memory Editor, 8 x LED Board, 7-Segment LED Displays Panel, Stepper Motor Phase Simulator, Oscilloscope, Signal Generator, LCD Module, etc. Fig. 4 shows the screenshot of some of these modules.

## Example 1: Timer0 module simulation

The easiest example file given in the package is that of an 8-bit Timer0 module of PIC16F84. The BASIC file timer0.bas uses Timer0 module interrupts to periodically change the value on Port B pins. The assembler source file timer0.asm was generated using Basic compiler integrated with the tool and the hexadecimal source file timer0.hex was generated using the integrated assembler:

```
TRISB = 0x00 'set all PORTB pins as
outputs
PORTB = %11111111 'make all PORTB
```

```
pins high
INTCON.T0IE = 1 'enable Timer0
interrupts
INTCON.GIE = True 'enable all
un-masked interrupts
OPTION_REG.T0CS = False 'set Timer0
clock source to internal instruction
cycle clock
End
On Interrupt 'interrupt routine
PORTB = PORTB - 1 'decrement the
value on PORTB
INTCON.T0IF = 0 'enable new TMR0
interrupts
Resume
```

Go to File > Load Program, or press Ctrl+L. Browse and select the file timer0.hex from the window, and open it. The path of the file now appears in the box next to Program Location, and the file will be loaded into IC program memory.

Select the PIC model from Options > Select Microcontroller (or simply click on the box next to Microcontroller in main window) and select the appropriate microcontroller (PIC16F84 in this example) from the window.

To open the graphical view of microcontroller pinout and logic states, click on Tools > Microcontroller View. Select the simulation rate to Extremely Fast from Rate in menu bar (or press Ctrl+F5.) The simulation will start immediately when you select Simulation > Start, or press F1. To stop the simulation any time, click on Simulation > Stop (or press F3.)

It is to be noted that, in order to compile this file for other PIC microcontroller models, you may have to change T0IE and T0IF bit names in the source code to TMR0IE and TMR0IF. The datasheet of the model you want to use would have the correct bit names for the INTCON register.

| | |
|---|---|
| **Developer** | Vladimir Soso, Oshon Software Solutions (www.oshosoft.com) |
| **Operating system** | Windows<br>Reported to be working with Linux under Wine project |
| **Latest version** | 6.96 |
| **File size** | 2.13MB |
| **Licence type** | Shareware/Trialware/ Demoware |

## Example 2: 7-segment LED display simulation

The following Basic program makes the numbers 0 to 100 display on a 7-segment LED display:

```
Dim digit As Byte 'input variable for
GETMASK subroutine
Dim digit1 As Byte 'current high
digit
Dim digit2 As Byte 'current low digit
Dim mask As Byte 'output variable
from GETMASK subroutine
Dim mask1 As Byte 'current high digit
mask
Dim mask2 As Byte 'current low digit
mask
Dim i As Byte
Dim phase As Bit
Symbol d1enable = PORTC.0 'enable
line for higher 7-segment display
Symbol d2enable = PORTC.1 'enable
line for lower 7-segment display
TRISB = %00000000 'set PORTB pins as
outputs
TRISC.0 = 0 'set RC0 pin as output
TRISC.1 = 0 'set RC1 pin as output
d1enable = False
d2enable = False
mask1 = 0
mask2 = 0
phase = 0
INTCON.T0IE = 1 'enable Timer0
interrupts
INTCON.GIE = 1 'enable all un-masked
interrupts
```

### Product Lines Supported by PIC Simulator IDE

| Full Support | | | Limited support |
|---|---|---|---|
| 12F629 | 16F648A | 16F874A | 10F320 |
| 12F635 | 16F676 | 16F876 | 10F322 |
| 12F675 | 16F677 | 16F876A | 12F609 |
| 12F683 | 16F684 | 16F877 | 12F615 |
| 16F72 | 16F685 | 16F877A | 12F617 |
| 16F73 | 16F687 | 16F882 | 12F752 |
| 16F74 | 16F688 | 16F883 | 16F610 |
| 16F76 | 16F689 | 16F884 | 16F616 |
| 16F77 | 16F690 | 16F886 | 16F707 |
| 16F84 | 16F737 | 16F887 | 16F716 |
| 16F84A | 16F747 | 16F913 | 16F720 |
| 16F87 | 16F767 | 16F914 | 16F721 |
| 16F88 | 16F777 | 16F916 | 16F722 |
| 16F627 | 16F818 | 16F917 | 16F722A |
| 16F627A | 16F819 | 16F946 | 16F723 |
| 16F628 | 16F870 | | 16F723A |
| 16F628A | 16F871 | | 16F724 |
| 16F630 | 16F872 | | 16F726 |
| 16F631 | 16F873 | | 16F727 |
| 16F636 | 16F873A | | 16F753 |
| 16F639 | 16F874 | | 16F785 |

```
OPTION_REG.T0CS = 0 'set Timer0 clock
source to internal instruction
cycle clock
loop:
For i = 0 To 99
digit1 = i / 10 'get current high
digit
digit2 = i Mod 10 'get current low
digit
TMR0 = 0 'reset Timer0 to prevent its
interrupt before both masks are
determined
digit = digit1
```

```
Gosub getmask 'get mask for high
digit
mask1 = mask
digit = digit2
Gosub getmask 'get mask for low digit
mask2 = mask
Gosub show1 'display new mask
Gosub show2 'display new mask
WaitUs 500 'delay interval suitable
for simulation
'use large delay for the real device,
say WAITMS 500
Next i
Goto loop
End
On Interrupt 'Timer0 interrupt
routine
'continuously switch between high and
low digit displays
If phase = 0 Then
phase = 1
Gosub show1
Else
phase = 0
Gosub show2
Endif
INTCON.T0IF = 0 'enable new TMR0
interrupts
Resume
getmask: 'get appropriate 7-segment
mask for input digit
mask = LookUp(0x3f, 0x06, 0x5b, 0x4f,
0x66, 0x6d, 0x7d, 0x07, 0x7f,
0x6f), digit
Return
show1: 'show high digit on its
display
d2enable = False
PORTB = mask1
d1enable = True
Return
show2: 'show low digit on its display
d1enable = False
PORTB = mask2
d2enable = True
Return
```

Similar to the previous example, open File > Load Program and select the file 7segment.hex. Select the microcontroller PIC16F877. Go to Options > Change Clock Frequency or click on the box next to Clock Frequency in the main window and enter the value 4.

Select 7-Segment LED Displays Panel from Tools. That will open the 7-segment displays window. In this panel, click on Setup button just below display 2. On the orange field next to Display Enable option, click twice to select the pin that will be used, that is, PORTC and 0. Click on Setup button below display 1 and click twice near Display Enable label as before, and select PORTC,1. Select the Rate to Ultimate. Start simulation by pressing F1.

Now the LED module starts displaying numbers from 0 to 99. The screenshot of this is shown in Fig. 6.

## Licence

This version of PIC Simulator IDE runs on Evaluation licence. You can start the program 30 times; each session will last for 120 minutes (two hours). After this trial period, a licence needs to be purchased for further use. ●

*The author is a technical correspondent at EFY, Bengaluru*

# RapidSmith: A Rapid Prototyping Tool for FPGA Designs

**A research-based, open source electronic design automation (EDA) tool written in Java for modern Xilinx FPGAs**

**ANAGHA P.**

The design and verification of field programmable gate arrays (FPGAs) can be very tiring work due to the time-consuming nature of FPGA compilation processes such as synthesis, mapping, placement and routing. This severely affects the productivity of an FPGA design engineer.

The BYU RapidSmith Project is a set of tools and application programming interfaces (APIs) written in Java language, with the goal of providing users with an easy-to-use platform to work on modern Xilinx FPGAs. Or in simple words, RapidSmith is a do-it-yourself CAD tool for the FPGA models of Xilinx. It offers a compact and fast device database with several APIs to enable different functions for Xilinx devices. RapidSmith project was developed by Brigham Young University, USA. It offers an excellent platform for academia to try out experimental ideas and algorithms for all fields of FPGA CAD research.

RapidSmith is based on Xilinx design language (XDL), which is a fully featured physical design language that provides human-recognisable format of Xilinx's proprietary native circuit description (NCD).

RapidSmith eases the difficulties of using XDL. It is mainly aimed at the use by academia in all fields of FPGA CAD research, and lets the researchers import XDL/NCD files, manipulate, place, route and export designs and perform a variety of design transformations. It also contains packages which can parse or export bitstreams at the packet level, and represent the frames and configuration blocks in the provided data structures. It can resolve, manipulate and export bitstreams according to documented methods of Xilinx.

RapidSmith is not a replacement for Xilinx ISE design suite. It can be used only with a current valid licence to Xilinx tools installation. Any person with a basic knowledge in programming and Java and a good understanding of Xilinx FPGAs and XDL can easily operate this tool.

**TABLE I**
**System Requirements**

| | |
|---|---|
| Operating system | Windows 7, Windows Vista, Windows XP Linux<br>Mac OS X (RapidSmith works, but Xilinx tools do not run on OS X) |
| Disk space | 400MB |
| Software | Xilinx ISE Design Suite 11.1 or higher<br>ISE 10.1.03 or earlier for legacy (outdated) devices<br>Java development kit (JDK) 1.6 or higher |
| Supporting JAR | Included: Caucho Hessian Implementation JAR v.4.0.6<br>Included: Qt Jambi, the Qt library for Java<br>Included: JOpt Simple<br>Optional: JavaCC (if the user wants to change the XDL design parser. There is also a plug-in for Eclipse for JavaCC which helps compile .jj files) |

## Licence

BYU RapidSmith Tools is a free software which comes under general public licence (GNU). One can redistribute and/or modify it under the terms of GNU GPL. The main purpose of this package is that it can be used as a research tool, and should not be used for designs bound for commercial purpose.

## Supported devices

RapidSmith is supported in Virtex 4 and 5 families in all forms and applications. It can create device files for all modern Xilinx FPGA families and hence can support, though to a lesser extent than Virtex 4 and 5, for other Xilinx FPGA families too. In the case of legacy device families, the design suite version ISE 10.1.03 or earlier may be required. The compatible features of various families are shown in Table II.

## Installation

First you need to ensure that the Xilinx tools and Java development

**TABLE II**
**Compatible Features of Various Families**

| Xilinx FPGA Family | Device Database, XDL Parsing, Manipulation and Export | Placement Capabilities | Router Capabilities | Bitstream Parsing, Manipulation and Export |
|---|---|---|---|---|
| Artix 7 | ✓ | ✓ | | |
| Kintex 7 | ✓ | ✓ | | |
| Spartan 2 | ✓ | ✓ | | |
| Spartan 2E | ✓ | ✓ | | |
| Spartan 3 | ✓ | ✓ | | |
| Spartan 3A | ✓ | ✓ | | |
| Spartan 3ADSP | ✓ | ✓ | | |
| Spartan 3E | ✓ | ✓ | | |
| Spartan 6 | ✓ | ✓ | | |
| Virtex | ✓ | ✓ | | |
| Virtex E | ✓ | ✓ | | |
| Virtex 2 | ✓ | ✓ | | |
| Virtex 2 Pro | ✓ | ✓ | | |
| Virtex 4 | ✓ | ✓ | ✓ | ✓ |
| Virtex 5 | ✓ | ✓ | ✓ | ✓ |
| Virtex 6 | ✓ | ✓ | | ✓ |
| Virtex 7 | ✓ | ✓ | | |
| Zynq | ✓ | ✓ | | |

kit are on your PATH. Add all the supporting JAR files in the JAR folder (hessian-4.0.6.jar, jopt-simple-3.2.jar, qtjambi-4.6.3.jar and qtjambi-<your_platform>-4.6.3.jar) to your CLASSPATH environment variable. Also add the RapidSmith Java project to CLASSPATH environment variable. Now you need to create an environment variable RAPIDSMITH_PATH and set the value to the path of Java project located on your computer.

In case you are using the RapidSmith for a legacy Xilinx device such as Spartan 2/2E, Virtex or Virtex E/2/2Pro, ISE Design Suite 10.1 or earlier will be required. The program should be pointed to the appropriate installation of tools. For this, we use an environment variable XILINX_LEGACY_PATH and set its value to bin path of the design suite tools. For example, XILINX_LEGACY_PATH=/opt/xilinx/10.1/ISE/bin/win32 will use the 32-bit tools of ISE 10.1 of a Windows installation. Skip this step if you are not using an outdated device.

Next we have to compile all the Java classes. This is done automatically if the project is imported to an IDE—like Eclipse. Now test the installation by running any of the programs.

## Overview

RapidSmith is organised into several packages. These packages and their description are listed in Table III. All these packages are prefixed with edu.byu.ece.rapidSmith.

## Design analysis tools

RapidSmith provides a simple platform to create design analysis tools for a

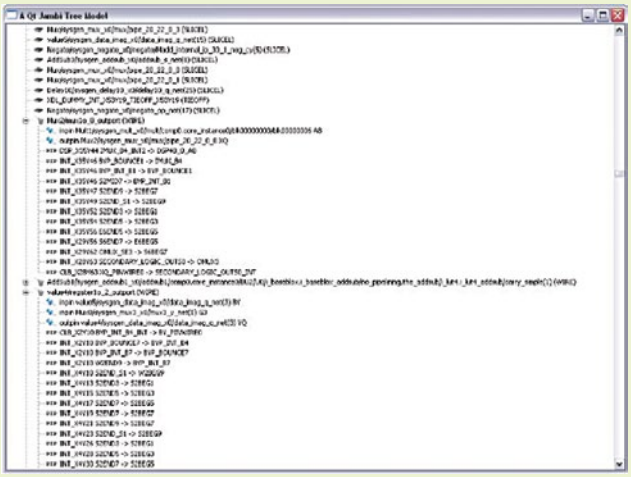

*Fig. 1: A simple design browser tool*

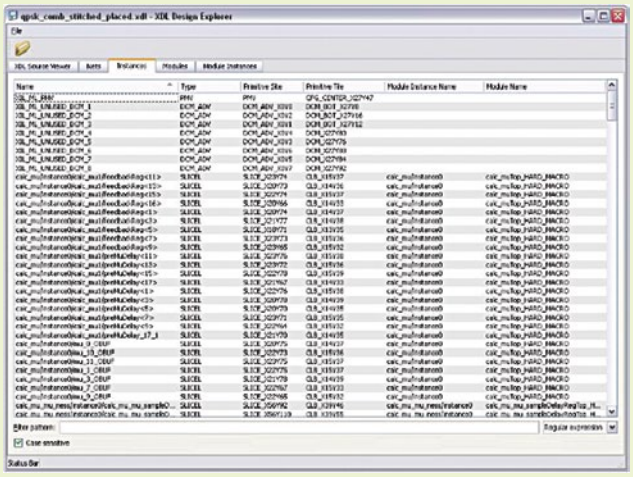

*Fig. 2: A program using RapidSmith*

**TABLE III**
**Description of Packages**

| Name of the package | Description |
|---|---|
| bitstreamTools.bitstream | Represents the packet view of a Xilinx bitstream. Contains export facilities and classes to represent header, packets, types, configuration registers and bitstream parsing. |
| bitstreamTools.bitstream.test | Contains classes and scripts to test the bitstream package. |
| bitstreamTools.configuration | Provides FPGA-level view of configuration data in a bitstream using frames. Contains an implementation of frame address register. |
| bitstreamTools.configurationSpecification | Contains specifications, in column layouts, of all supported devices. Defines different constructs such as block types, block sub-types and part library functions. |
| bitstreamTools.examples | Provides some examples on how to use the bitstream functionality in RapidSmith. |
| bitstreamTools.examples.support | Gives some support classes for the examples in the previous bitstreamTools.examples package. |
| design | Represents all of the constructs in XDL design files, for example, Nets, Instances, PIPs, Modules, and Designs. |
| design.explorer | A GUI interactive explorer that allows the user to navigate through the various constructs in the design such as Instances, Nets, Modules and Module Instances.<br>Has a tile map which allows the user to view the locations of various objects on the FPGA fabric.<br>Also contains an experimental timing report parser to correlate timing information with a design. |
| design.parser | A JavaCC-based parser for XDL files which populates an instance of the Design class in the design package. |
| device | Encloses all details of an FPGA device, such as part name, tiles, primitive sites and routing resources.<br>All information about Xilinx parts is populated in device from the XDLRC files generated by xdl executable. |
| device.browser | An extension of the part tile browser of the examples package. Allows the user to browse all of the installed parts and also navigate primitive sites as well as routing resources. |
| device.helper | Comprises some classes to help in the creation of the device files. |
| examples | Contains a few examples for users on how to use RapidSmith. |
| gui | It is used to help build graphical programs in Qt Jambi for RapidSmith. Contains some commonly used widgets that can be put together easily using the Qt Jambi framework. |
| placer | Encompasses classes to place designs. |
| router | Contains classes to route design.<br>Has a framework to help the RapidSmith users to create new routers. |
| tests | Comprises test classes that would exercise various portions of RapidSmith. |
| timing | Currently, this package is an experimental TWR parser that will parse timing reports output from Xilinx Trace (trce). |
| util | Miscellaneous support classes and utilities, including the installer. |

given design in XDL format. Consider the simple design browser tool given in Fig. 1. It is a screenshot of a tree-based graphical list traversal of an XDL design file. Here you can see primitive instances, pins and routing protective Internet protocols (PIPs). The screenshot of a similar tool is provided in Fig. 2, which shows a program using RapidSmith, with the ability to interactively search for primitive instances in a loaded design. Yet another example is the design analyser which tabulates detailed resource utilisation statistics and design properties.

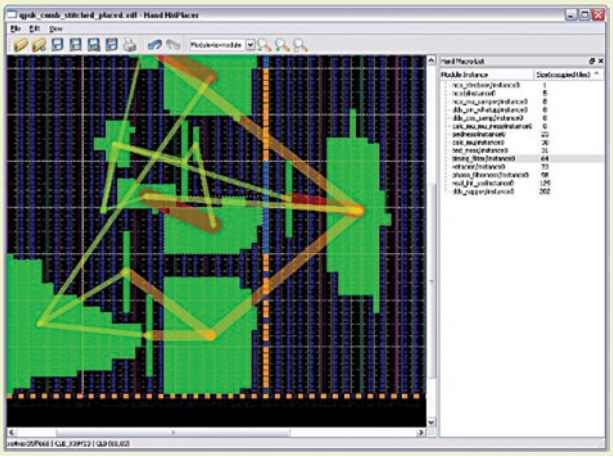

*Fig. 3: Screenshot of an interactive hard macro placement tool*

## Design creation tool

Apart from reading and writing XDL files, RapidSmith's APIs provide the user with a mechanism to create a circuitry in XDL file format. It also has API routines to create primitive instances, customise these instances and even create logical connections between primitive instance pins.

## Physical design tools

This software offers an excellent framework for the creation of physical design tools, for example, placement and routing tools. Fig. 3 shows the screenshot of an interactive hard macro placement tool built on RapidSmith.

In short, RapidSmith is a software that lets you manipulate XDL file formats, and provides a great platform on which one can develop a complete FPGA design tool suite. It allows for a variety of circuit manipulations. It opens the door to new opportunities for research in FPGA CAD tools. ●

*The author is a technical correspondent at EFY, Bengaluru*

# "Bringing the Internet of Things to life requires a comprehensive systems approach..."

Narang N. Kishor, mentor and principal design architect of Narnix Technolabs helps us cut through the jargon and look deeper into what really comprises the IoT

**JANANI GOPALAKRISHNAN VIKRAM**

**The IoT is probably too broad a term for people to focus on. Could you, specifically, name some of the exciting technologies that are beginning to surround us today (signs of coming of the IoT)?**

Well, IoT is all about heterogeneous and aware devices interacting to simplify people's life in some way or the other.

One of the most profound (exciting as well as terrifying) technologies is augmented reality (AR). It is altering the way the world or immediate environment is viewed, especially for the users of this technology. Imagining the way the world would appear and be experienced, while walking or driving down the street.

With AR displays, informative graphics will appear in the corner of the glass, and an audio prompt would inform about whatever one is seeing. This information will be refreshed in tandem with movements of the wearer. Similar technology is already available in smartphones. And Google Glasses are already here.

Another up-and-coming technology is the ability of smartphones to communicate via NFC and Wi-Fi with a range of devices, including wristwatches, healthcare sensors and home entertainment systems. People are already captivated by the vision of being able to control everything in their homes and offices, from temperature, lighting and security to using devices to brew cups of coffee, program entertainment, check health records and conduct a myriad of other tasks.

Enterprises are also beginning to embrace IoT for tracking physical assets, managing customer relationships and creating efficiencies in business operations and supply chains.

**What do you think are the key components of the IoT—and at what stages of maturity are these? Which of these components/frameworks do you think need to really develop very fast in order to give the IoT the required momentum?**

The key components of the IoT are sensing nodes, local embedded processing nodes, connectivity nodes, software to automate tasks and enable new classes of services, remote embedded processing nodes and last but not the least full security across the signal path.

To give the IoT the required momentum, device management platforms, cloud computing and big data sciences in the virtual world are already flourishing and well geared up to meet the expectations of the designers. But, the physical world needs to catch up. The wireless and networking technologies need to mature very fast; we need innovative approaches in deployment of large sensor (and actuator) networks.

Bringing the IoT to life requires a comprehensive systems approach, inclusive of intelligent processing and sensing technology, connectivity, software and services, along with a leading ecosystem of partners.

**For people/start-ups wishing to work in this field, what kind of competencies do they need to develop?**

I would sincerely recommend them to brush up their basic electronics fundamentals including but not limited to sensors, analogue, power, RF and various compliance issues in hardware design. It would really help if they have in-depth understanding of different communication technologies, protocols and standards, particularly relevant to the domains of their applications. Understanding of security, privacy and socio-ethical implications of the solutions, services and applications they are trying to develop would also help. Please note, embedded processing, data analytics and other software skills are already considered as a must, so I am not delving into those.

# Home Automation at CES 2014

As always, the International CES held at Las Vegas this January featured a myriad of innovations, and overall the Internet of Things (IoT) appeared to be a popular theme with various interesting announcements related to sensor technology, home automation, wearable computing, digital health and fitness, automotive electronics and green technology. In this issue, let us look at a few interesting home automation products displayed there:

***LG's new natural language messaging technology.*** LG displayed its useful HomeChat technology, which allows users to text their LG appliances as if they were humans. And they respond like humans too! For example, now it is possible to ask your LG refrigerator if it has enough milk in its dairy tray or vegetables in its crisper drawer. Or, you can text LG's Hom-Bot Square robotic vacuum cleaner to ask when it last cleaned the house, and perhaps instruct it to redo the job.

You can also use HomeChat to start a load of laundry on your new LG smart washer and dryer, monitor its status, download new cycles and receive push alerts via smartphones or an LG Smart TV!

***Okidokeys, now get to know about these smart keys.*** The OpenWays Group launched Okidokeys, a technology that allows you to lock and unlock home doors, garage doors or gates using multiple means such as smartphones, smart keys, smart wristbands and smart watches too. The kit is very simple to install, and the platform works with multiple communication protocols such as Bluetooth 4.0, near-field communications (NFC), radio frequency identification (RFID) and crypto-acoustic credential (CAC) technology. The Okidokeys virtual network, bridge and app allow users to operate the lock remotely using iOS and Android devices.

***Mother incarnate.*** If you really believe that nobody cares more for you than your mother, then Sen.se's Mother is just the right home management tool for you. It is not only a smart home product but also a smart life product, as it monitors those aspects that you consider essential for a happy and healthy life.

The Mother system is based on multi-purpose sensors, which the inventor calls the 'Motion Cookies.' You can stick these cookies onto almost anything, from toothbrushes and water jugs to pill boxes and refrigerators. So, you can set the system to watch how much junk food you eat or how much water you drink, whether you have taken your pills and walked enough or whether your home and kids are safe when you are away.

Apart from showing all the information in a well-designed app, Mother can also remind you about all these and more, depending on your settings. The cookies are colour-coded so you can use them for activity groups or different members of the family. You can keep reprogramming the system to help you in other ways, as and when needed.

***Staple your gadgets together.*** Staples Connect Hub is for those who already have dozens of Internet-connected devices at home and are tired of managing the many apps that manage these! The Connect Hub pools together all your IoT gadgets so you can control everything from one app. Staples has already tied up with several device makers, and is in talks with many more.

We will look at more CES revelations in various categories in the coming episodes. ●

*The author is a technically-qualified freelance writer, editor and hands-on mom based in Chennai*

## Google crazy about IoT

Google seems to be going strong with its IoT plans. And, it is not all about the Google Glass. Last year, they bought Waze, a successful GPS navigation and traffic management tool, and they have embarked the 2014 journey by acquiring Nest, makers of the well-known smart thermostat. Around the same time, they (with others) also started the Open Automotive Alliance (OAA), aimed at popularising Android as an operating system for in-car infotainment systems. Trend-watchers hint that Google is working on creating APIs that connect Gmail and Google Drive to smart products. Their aim, apparently, is not to simply have successful products or operating systems for the IoT, but to be the preferred cloud service platform for the digital lifestyle ahead.

## Wolfram tech for the IoT

British scientist, Stephen Wolfram, and his software company have been developing several strong IoT technologies towards the final goal of 'seamlessly'

connecting the things in the world. The Wolfram Language is a programming language that helps people to easily describe and compute about things in the world. In line with his belief that folks also need to first 'measure and interface' with those things, he has also launched the Wolfram Connected Devices Project (http://devices.wolfram.com), a database on IoT devices, which tracks the size, price and specifications of IoT products. The information is searchable, comparable and analysable through the computational knowledge engine, Wolfram Alpha. Currently, the database holds information about thousands of devices and components. Wolfram promises to seamlessly integrate it with his Data Framework and Data Sciences Platform, which will make it possible to scientifically study, compare and build IoT products, tools and platforms.

*Read more about the Internet of Things at internetofthings.electronicsforu.com*

# Integrating The Integrated Circuit

Presenting the story of a chip that we cannot now live without, which is an interesting outcome of two engineers who developed it without knowing each other

**KOMMAJOSYULA KRISHNA MURTY**

Unlike the invention of television which was replete with snooping, spying and courtroom drama, invention of integrated circuit (IC) was the outcome of two engineers who developed it separately without knowing each other and a host of unsung heroes.

IC is an invention that changed the way of the world forever. As usual, the Nobel committee took its time to award a Nobel and finally the award came in the year 2000 for an invention of 1958. The Nobel winner wrote in his autobiography submitted to the Nobel committee, "I would like to mention another right person at the right time, namely, Robert Noyce, a contemporary of mine who worked at Fairchild Semiconductor. While Robert and I followed our own paths, we worked hard together to achieve commercial acceptance for ICs. If he were still alive, I have no doubt we would have shared this prize." In this world torn with jealousy, personal egos, profits and politics, salute the unassuming inventor Jack Kilby!

And the tribute for him? Unprecedented growth of ICs. The very first IC contained only four transistors, and the present-day chip Core i5 contains 995 million transistors. He "didn't realise then that the integrated circuit would reduce the cost of electronic functions by a factor of a million to one."

Transistor was an outstanding invention which revolutionised electronics. But building complex circuits required a large number of transistors and other passive components. Think of those long-standing ICs, 741 and 555. The ubiquitous 741 op-amp designed by Dave Fullagar in Fairchild Semiconductor in 1968. 555 IC was first introduced around 1971 as 'The IC Time Machine.' Designed in 1971 by Hans Camenzind under contract to Signetics, it still sells about one billion units every year. Think of wiring those 741 or 555 ICs individually which have 20 and 28 transistors, respectively. It is a mammoth task and sheer 'tyranny of numbers.'

It was in this tyrannical scenario that Jack Kilby joined the semiconductor lab at Texas Instruments in 1958. Soon he was asked to develop smaller electrical circuits, kind of micro-modules, specifically for the military. As he proceeded with his task, he was not convinced that the micro-module was the answer—still a large number of components needed to be hardwired.

## The beginning

Three problems were bogging down the development of microelectronics: integration, isolation and connection. There was no way of integrating all different active and passive components on a single semiconductor crystal. Even if connected, there was no way to electrically isolate them. Also, there was no way to connect individual components, at best they could be done with gold wires.

Geoffrey Dummer thought otherwise, "With the advent of the transistor and the work on semiconductors generally, it now seems possible to envisage electronic equipment in a solid block with no connecting wires. The block may comprise layers of insulating, conducting, rectifying and amplifying materials, the electronic functions being connected directly by cutting out areas of the various layers."

He said so in his paper at the US Electronic Components Symposium. Geoffrey William Arnold Dummer, a British electronics engineer and consultant, is credited as 'The Prophet of the Integrated Circuit.'

Kilby thought likewise; he summed up the thoughts in his mind of those days in a later day in the year 1976's article titled 'Invention of the IC,' thus, "Further thought led me to the conclusion that semiconductors were all that were really required—that resistors and capacitors (passive devices), in particular, could be made from the same material as the active devices (transistors). I also realised that, since all of the components could be made of a single material, they could also be made *in situ* interconnected to form a complete circuit." He began sketching his ideas.

Providentially in July 1958, he was alone in the deserted laboratory as the


*Intel Core i7 processor (Courtesy: www.intel.com)*

rest of the lab was on a virtual holiday. He was not able to take leaves like his other colleagues as he had joined the company recently. He started working on his idea to bring all the parts of the chip under one block of the semiconductor, as one monolithic unit. The result—a slice of a centimetre-wide germanium, with protruding wires, glued to glass slide.

He gathered several executives, including former Texas Instruments Chairman Mark Shepherd, for a demonstration event on September 12, 1958. When Kilby pressed the switch, an unending sine curve undulated across the oscilloscope screen. We have the first IC, a 'phase-shift oscillator.' The patent for the first IC, 'Solid Circuit made of Germanium,' was filed on February 6, 1959, and the world never looked back.

There is an unprecedented growth in the ICs and microprocessors, but did Jack Kilby take all the credit for this? No! He said, "Well, I don't know that I get credit for their profound effect. It's true that the original idea was mine, but what you see today is the work of probably tens of thousands of the world's best engineers, all concentrating on improving the product, reducing the cost, things of that sort." Kilby was very right when further improvements and developments are the handiwork of a number of engineers and scientists. Let us begin from the beginning. Let us look at those who "have had even a small part in helping turn the potential of human creativity into practical reality."

## Transistor: the starting point

Early morning on November 1, 1956, William Shockley received a telephone call informing him that he had won the Nobel Prize in physics along with John Bardeen and Walter Brattain for the invention of the transistor. Nine years ago on December 23, 1947, they invented the point contact transistor at Bell Laboratories in Murray Hill, New Jersey. The name 'transistor' was coined by John R. Pierce.

The first silicon transistor was presented by Morris Tanenbaum at Bell Labs on January 26, 1954. Gordon Teal, with expertise in high-purity crystals, takes the credit for the first commercial silicon transistor in 1954.

Shockley subsequently designed a junction transistor. He was well known for his smart examples. Once a student confessed his inability to understand the concept of amplification. Shockley told him, "Take a bale of hay and tie it to the tail of a mule. Then strike a match and set the bale of hay on fire. Now compare the energy expended shortly thereafter by the mule with the energy expended in striking the match, you will understand the concept of amplification."

Shockley left Bell Labs and in September 1955 founded the Shockley Semiconductor Laboratory. He recruited "the most creative team in the world for developing and producing transistors," which included Gordon Moore, Jean Hoerni and Robert Noyce.

In 1949, Professor Grant Gale at Grinnell College showed his 18 physics students two of the very first transistors ever made from Bell Labs. Noyce was one of them and he was immediately hooked to the transistor. When he joined Massachusetts Institute of Technology for his Ph.D., he knew more about transistors than most of his professors.

Soon afterwards, Noyce joined Philco Corporation which was not ready to invest money into the futuristic research Noyce had in mind. In 1956, he left Philco to join Shockley. The way he joined was a classic example of his confidence. He contacted Shockley by telephone a few times and put himself and his wife on a night flight from Philadelphia to San Francisco. They arrived in Palo Alto at 6 am, and by noon Noyce had signed a contract to buy a house. Then he met Shockley and got his job, in that order.

But by December 1956 their egos clashed and most of that 'most creative team' got disenchanted with Shockley's management style. In the summer of 1957 Moore, Hoerni, Jay Last and four other engineers wanted to look for greener pastures by starting their own company. But they needed a leader and an administrator. So they turned to Noyce. He was 29 years old. "With his strong face, his athlete's build and the Gary Cooper manner, Bob Noyce projected what psychologists call the halo effect. People with the halo effect seem to know exactly what they are doing and, moreover, make you want to admire them for it. They make you see the halos over their heads." He agreed to join them but with his white lab coat and goggles on and his research in. They founded Fairchild Semiconductor.

Jay Last said in an interview much later, "There were eight of us. We all had different skills but in the group we had all the necessary skills and it was a completely cooperative effort." Shockley called them 'Traitorous Eight.'

Everyone knows that the first electronic numerical integrator and computer known as ENIAC was a monster measuring 30 metres long and 3 metres high, which boasted use of 18,000 vacuum tubes. But the government wanted smaller computers to facilitate automatic on-board guidance in rockets. Transistors did simplify the system and could cut down the size. But then even a radio with seven or eight transistors looked like a map of a small city and had to be hand wired in a cumbersome, laborious process. Sizes were getting reduced and smaller devices were being produced. 'Miniature' was no longer the word and the new buzz word was 'micro-miniature.'

Fairchild's founders understood that it is the survival of the micros. Noyce and Moore theorised an idea of combining transistors in a solid block of silicon. Transistors, insulators, rectifiers, resistors, capacitors and all of them would have to be carved, etched and built on a wafer of silicon or, in other words, an entire circuit to be fabricated on a little chip.

However, in the late 1958, Kurt Lehovec, at the Sprague Electric Company, found a simple solution to the isolation problem. He was paid only one dollar for this invention by the

management of Sprague as he was their employee. That is the interest shown by Sprague for an invention, a method still used for IC manufacture. To quote Moore again, "Yeah, it's very much the same technology today."

In an article entitled 'Microelectronics,' published in 'Scientific American,' Robert Noyce wrote, "The integrated circuit, as we conceived and developed it at Fairchild Semiconductor in 1959, accomplishes the separation and interconnection of transistors and other circuit elements electrically rather than physically. The separation is accomplished by introducing p-n diodes or rectifiers, which allow current to flow in only one direction. The technique was patented by Kurt Lehovec at the Sprague Electric Company."

Noyce came up with a workable solution unaware that Jack Kilby at Texas Instruments had already succeeded, albeit with germanium. Silently working behind was Jean Hoerni, one of Fairchild's original founders, when he developed the 'planar' process. By using the planar process, each layer could now be isolated electrically. No need to cut the layers and join them where required as was done in the past. By mid 1959, Noyce created an IC made of silicon, using the cutting-edge insulating process developed by Jean Hoerni.

Gordon Moore confided in an interview, "In fact, when I look at the development of the integrated circuit, I always measure it from the first planar transistor rather than from the first integrated circuit."

Fairchild Semiconductor filed a patent for a semiconductor IC based on the planar process on July 30, 1959. But Texas Instruments had filed a comparable patent with Kilby's IC some time before. After a decade-long legal battle, the U.S. Court of Customs and Patent Appeals sustained Noyce's claims on interconnection techniques but gave Kilby and Texas Instruments credit for the first working IC.

Earlier, a German engineer Werner Jacobi (of Siemens AG) had filed a patent for an IC-like device. It was a five-transistor amplifier designed to produce cheap hearing aids. Commercial use of his patent was not reported.

In a historical coincidence, Noyce and Kilby invented the IC without knowing each other and about the same time. Noyce's silicon IC is more efficient, more practical and the most common form now. NASA used Noyce's ICs for the first computers in the spacecraft of the Gemini programme.

By 1968, 'the most creative team' at Fairchild decided to start its own company. With initial capital from Arthur Rock, a venture capitalist, NM Electronics (NM standing for Noyce Moore) was incorporated on July 18, 1968 for developing large-scale ICs. Andrew Grove was roped in who would remain with them as president and CEO into the 1990s. The company's name was soon changed to Intel, taken from the first syllables of integrated electronics.'

Just in a few months, Intel produced the 3101, a high-speed random access memory (RAM) chip. Those were the days when semiconductor memories were much more expensive than standard magnetic core memories. Intel felt that the future was in semiconductor memories which would soon replace magnetic cores.

## Evolution of microprocessor

In a dramatic turn of events, in November 1971, Intel presented the 4004 to the public as "a new era of integrated electronics …. a microprogrammable computer on a chip." The dawn of the microprocessor! Gordon Moore called it, "one of the most revolutionary products in the history of mankind."

The invention of the microprocessor is a turning point in Intel's history and the industrial world. Interestingly, the development of 4004, the world's first microprocessor, was an offshoot of a necessity. Noyce quipped, "In a small town, when something breaks down, you don't wait around for a new part, because it's not coming. You make it yourself." The glory is now with Ted Hoff.

Ted Hoff recalled in an interview, "We were contacted by a Japanese calculator company whose calculators came out under the name Busicom. They said that they would like to have us build a family of chips for a whole series of different calculator models, models that would vary in type of display, whether they had a printer or not, the amount of memory that they had and so on.

While on the subject, let us digress and go back to Kilby once again. Patrick E. Haggerty, then TI chairman, challenged Kilby to design a calculator that could fit in a coat's pocket—equal or better than the bulky electromechanical desktop models available those days. Just to give you an idea, a calculator released just a year earlier weighed 55 pounds and cost $2500. The result is the handheld calculator, of which Kilby is a co-inventor. He held about 60 patents including one for a thermal printer.

Now back to Ted Hoff; Busicomp contracted Intel to design cost-effective chips for a series of calculators. The project was assigned to Ted Hoff who did not like the idea which required 12 custom chips "because there was a lot of random logic and many interconnections between different chips."

In the words of Ted Hoff, "It seemed to me we could simplify the control logic, reduce the number of transistors and cut the overall cost….. Together Stan Mazor and I—Stan joined at the beginning of September—created an outline of what we were talking about and our marketing department proposed our alternate approach to the calculator company in the middle of September."

Hoff said, "Our initial goal was never to make a microprocessor, only to solve this particular customer's problem, this calculator design problem. But there were several aspects of the design that became more evident as it was pursued. One was, being more general-purpose and faster than the original design, we figured it might be

useful for a broader range of applications than just the calculator family."

He also said, "Dr Federico Faggin was hired around in April of 1970 and given the responsibility for chip circuit design and layout, to turn this architecture into a physical transistor layout. He developed a number of techniques to take advantage of Intel's new silicon gate metal oxide silicon (MOS) process and even found ways to improve performance using techniques that others felt impossible to do with silicon gate. He had working parts by around January of 1971."

The result was the 4004 microprocessor, a 4-bit chip containing 2300 MOS transistors, and as powerful as the ENIAC. But the sidelight is that only after delivering the chip to Busicomp, Intel realised the market potential of the chip. Intel had to renegotiate with Busicomp and regain the exclusive rights. We would have missed the latest Intel Core i7 which contains 995 million transistors.

So let us salute the pioneers! Kilby wrote in the autobiography submitted to Nobel committee, "Whether the research is applied or basic, we all 'stand upon the shoulders of giants,' as Isaac Newton said. I'm grateful to the innovative thinkers who came before me, and I admire the innovators who have followed."

Kilby said, "From 1978 to 1984, I spent much of my time as a distinguished professor of electrical engineering at Texas A&M University." And his words for the honour, "The 'distinguished' part is in the eye of the beholder, and I really didn't do much 'professing'."

Was he unhappy at his late selection to the Nobel? "It's not too late—at least I'm still alive. You have to live long enough to receive the Prize," he said. Noyce could not live long enough.

But Noyce charted an American revolution by the way he managed the two companies. "The people that are supervising it (a project) are more dependent on their ability to judge people than they are dependent on their ability to judge the work that is going on," Noyce said in 1965. He avoided Shockley's mistakes. He established a very casual and open working environment, where his brilliant young employees enjoyed working and worked with responsibility.

During one of the last interviews, he was asked what he would do if he becomes the 'emperor' of the United States. He answered that he would, amongst other things, "make sure we are preparing our next generation to flourish in a high-tech age. And that means education of the lowest and the poorest, as well as at the graduate school level." ●

*The author has written six science books published by Pustak Mahal, New Delhi and an engineering book by Industrial Press, New York. Radio Talker and RCFA specialist, he is presently the head of technical training with Coromandel International Ltd for their group of companies.*

# ShopSecure: An IoT Security System

ShopSecure is an active security monitoring system developed by Knewron, which not only detects security breaches and unusual activities but also informs the occurrence to the user and authorities

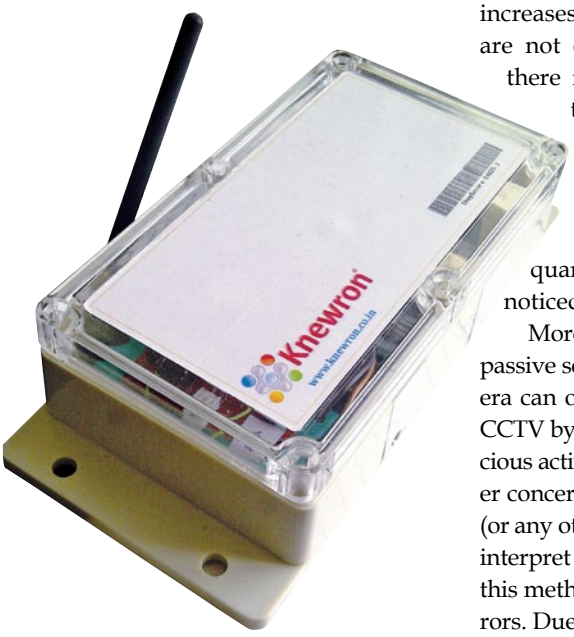


*ShopSecure security monitoring system*

**ANAGHA P.**

We now live in a world where we are being watched everywhere. Seems like there are surveillance cameras in all places you go. You may not be aware of it but almost all retail shops, restaurants, ATM counters, banks and government establishments are equipped with surveillance cameras as a security measure. A person is likely to be caught in a security camera at least once a day.

## Why not closed-circuit television (CCTV)

The closed-circuit television (CCTV) cameras are very popular amongst the shop owners and security specialists but they have several shortcomings.

First of all, the CCTV cameras are used for live monitoring during the daytime, but when a shop is closed, the cameras are also disabled, and this increases vulnerability. Even if they are not disabled after closed hours, there is no way for the employer to know about a security breach until the footage for previous night is checked. Sometimes when only a few goods are stolen from a large quantity of stocks, it may go unnoticed until reconciliation.

Moreover, CCTV monitoring is a passive security system where the camera can only record the video, but the CCTV by itself cannot detect any suspicious activity or inform it to whomsoever concerned. Since you need a human (or any other specialised mechanism) to interpret the feed and act accordingly, this method is tedious and prone to errors. Due to all these factors, the CCTV method is almost meaningless when it comes to intrusion detection.

## The birth of ShopSecure

The distribution partners of Knewron, S.V. TechnoCrafts, were approached by shop owners in their area who said that many of them were desperately looking for something which could serve as an effective alternative to CCTV cameras and be economical for their pockets. "This critical need prompted us to work on a solution that could serve the purpose with the help of technology at hand," says T. Anand, the co-founder of Knewron.

Imagine a device that is user-friendly, economical, reliable, records the video round the clock, does some analysis by itself, detects suspicious activities and takes precautionary measures. You need an active system for fulfilling these conditions and ShopSecure is one such system. It can detect malfunctioning or suspicious incidents and report or act accordingly. ShopSecure would not wait until the footage is analysed by the user, but it will intimate them instantly of security breach and can also sound an alarm to scare away intruders.

## Working

ShopSecure belongs to the Internet of Things (IoT) device line with fundamental IoT qualities. Basically it is an M2M communication model which is interoperable in nature. It involves uniquely addressable physical entity connected in local/private or cloud network for effective functioning. The device activity log can be streamed over the Internet and later analysed by users. The device can operate autonomously with Internet Bridge over cloud (with GPRS or 3G) or in direct contact mode (with GSM module).

All the intelligence and processing of ShopSecure comes from Atmel's 8-bit AVR microcontroller core around which this device is built. Temperature sensor, audio playback and battery changeover recharging unit are the other key components of this device.

The device is equipped with infiltration sensors (MEMs, reed switches or micro-switches, etc) which actively monitor environment and doors/windows when armed. It is designed to intimate the user when it senses anything out of the ordinary, like a sudden rise in temperature, and it can take appropriate predefined actions. ShopSecure can be remotely controlled and configured and is constructed from some of the commonly available sensors and other components, thus making it low-cost. Its configuration and operation are so simple that, if you can use a mobile phone, you can use it.

In case of devices deploying CCTVs or IR sensors and other proximity sen-

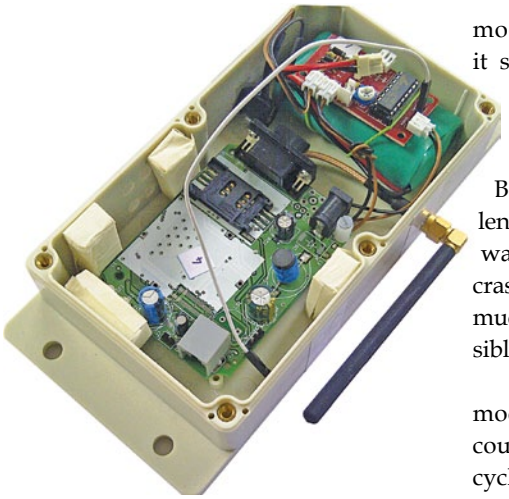

*An inside view of the device*

sors, sensitivity is a matter of specification. The sensors deployed in ShopSecure are based on make-break mechanism and hence oblivious of sensitivity.

## Customisation

ShopSecure is a customisable equipment. It allows for the installation of various types of sensors for detection of breach as per customer requirements and suitability of application. These sensors then form input to ShopSecure for further processing. The device is mostly put in sleep mode. An abnormal activity is detected depending upon sensor outputs and ShopSecure configuration. Whenever any problem is detected, the device would alert user(s) with an SMS and a phone call to the predefined numbers with audio playback stating the emergency. The users can also opt for the device to directly call authorities (police or fire brigade) regarding the incident.

The gadget is provided with two modes of operation: Stealth mode and Shout mode. In Stealth mode, if intrusion is detected, ShopSecure would silently inform users about the incident and then they can rush towards that particular region and perhaps catch the intruders in action—red handed. However, in cases where the user is far away, it can be switched to Shout mode. Here, when intrusion occurs, an alarm is sounded to scare away the intruders and simultaneously inform users about the incident. It is the Stealth mode of ShopSecure which makes it special compared to other similar products available in the market.

## Design challenges

Being an IoT product, the main challenge during the design of ShopSecure was the need for a software that offers crash-free operation and provides as much up-time for the device as possible.

The team listed as many failure modes as possible that ShopSecure could face during its operational life cycle. Then they worked on reducing the risks related to each one. "That was perhaps the longest part of the development cycle; however, it was the critical one and useful one too," says Anand, managing director, Knewron.

Another challenge was system recovery under crash conditions. The team had to work on how ShopSecure would respond to unauthorised access and how it would recover from the crashes caused by this or any other reason. Significant portion of software addresses this part now.

Besides, providing audio calling facility in regional language was another challenge. It was a tricky issue to sync audio playback with automated phone calls. The company currently offers only Hindi or English versions of audio playback for simplicity and to keep the costs low.

Since ShopSecure has rechargeable battery as a backup option, power consumption has to be very low to ensure reliable uptime for longer hours. Optimisation of system resources to consume lowest power possible was yet another issue that had to be taken care of.

Since the product was developed keeping in mind the local shop owners, the overall cost was to be closely monitored during development, and the team was successful in making it affordable.

In all, it took around five months to get ShopSecure from idea to a finished product.

## What's in store

The initial version of ShopSecure is a finished product and has been available for ordering since the end of 2013. As of date, ShopSecure is the lowest priced device of its kind available in the market. It has the capability to interface 14 break-in sensors. However, if the buyer needs only lesser number of sensors, the cost of installation would also be lesser.

The development team has already started working on the next major revision and it should be available by the first quarter of 2014. The revised product would feature better aesthetics, more sensing capabilities (vibrations, sound, fire, movement, etc), increased ease of installation, in-built statistical analysis, additional robustness, smaller form factor and lower cost. It would also include smartphone application for ShopSecure control, Web-based control application with statistical analysis and visualisation capability and, more importantly, intra-device communication mode. This feature (intra-device communication mode) would make ShopSecure truly a part of the IoT system; this would mean that, in case of emergency, two devices in vicinity can cooperate with each other for effective response and outcome.

Although ShopSecure was conceived with the motive to help shop owners for security monitoring, it can be easily customised for securing homes. Suppose you are on vacation and someone breaks into your house, the ShopSecure (or shall we call it HomeSecure now) can send an informing call to your relatives, neighbours, security guard or even to the local police station, at the very moment of intrusion. That is yet another application of the device.

In short, ShopSecure is an active security system that observes the surroundings, acts based on guidelines predefined by the user, keeps a log of the happenings, and intimates them when something unusual or out of range happens—all this at a reasonable cost. ●

*The author is a technical correspondent at EFY, Bengaluru*

# Audio/Video Processors for Embedded Multimedia Designs

Diversity of audio/video content and formats has burdened multimedia designers with the responsibility to adapt and deliver to consumer expectations. Audio/video processors are at the heart of these multimedia designs, and this story looks at what has changed in the last year

**PANKAJ V.**

Over the last few years, we have seen a revolution in the field of entertainment devices. The list that began with traditional radio and TV sets has exploded into an endless number of devices ranging from smartphones, digital cameras and camcorders, portable media players, mobile Internet devices (MIDs), netbooks, all the way up to large flat-panel displays, home theatre systems and much more.

Now, for most entertainment devices, processing audio and video is one of the most important functions, and selecting an optimal processing solution is one of the keys to success for any product that has to do any significant amount of computing. The desired product features influence the product cost, power consumption and performance as well.


## Aspects to be considered

Audio processors take comparatively lower processing power than video processors, but they are both equally important. Let us take a look.

***Audio processors.*** Audio processors serve a variety of fields, and each of these fields has its own challenges and design goals. In some fields, digital signal processing is used to produce high-fidelity sounds such as in the entertainment industry where audio quality is paramount. On the other hand, communication systems require the audio to be clear while keeping within a low data rate. While designing any audio processing system, the designers have three primary targets to achieve: good audibility, intelligibility and fidelity.

*Audibility.* The audibility of speech or music must be sufficient to achieve the desired effect attained without distortion or feedback.

*Intelligibility.* Intelligibility is determined by the signal-to-noise ratio and direct-to-reverberant ratio at the listener's end. Whilst the system must suppress external as well as electrical noise produced within the system itself, controlling the reverberation of acoustics produces good intelligibility.

*Fidelity.* Fidelity of sound is the overall frequency response of the sound, and a wide and relatively uniform frequency range contributes to realistic and précise augmentation of sound. Fidelity is basically contributed by every component, and any limitation at any point can affect the fidelity of the entire system.

***Video processors.*** Video processing applications are growing exponentially, with the new kind of video-centric products surfacing rapidly. Computationally demanding video processing has different requirements for different applications. For instance, video applications such as home theatre systems require a processor which is flexible enough to connect all components together, process the signal for a large living room, creating an ultimate home theatre experience by delivering premium sound quality.

On the other hand, vehicle-reversing cameras and other small-screen LCD applications for both automotive and non-automotive electronics require good image clarity. These applications also pose challenges such as safety and reduced power consumption, especially in automotive systems in order to minimise the power burden on the battery. This increasing range of

## How do you find the best fit for your application?

Quality function deployment (QFD) technique is used to convert vague customer requirements into actionable parameters or specifications. However, when extended further for technical aspects, it yields many important selectors that are helpful in filtering too many available options to a very few useful ones.

In initial two to three steps of QFD, customer requirements are translated to application-level requirements. Once application requirements are understood, one can break them down further to actionable parameters for component selection. These parameters could be (but not limited to)—power consumption, operating levels, usage environment, output audio quality levels, frequency response, bandwidth, controllable frequency bands, sound clarity requirements, etc.

Typically, wherever high-quality and high-fidelity sound requirements are present, faster processors such as FPGAs are appropriate fit whilst for low-cost and basic requirements, digital or analogue processors are best fits.

—***T. Anand, co-founder, Knewron***

applications poses a challenge for any designer who is required to choose from so many processors and their complexities.

Let us take a look at what the audio/video processing industry has in offering for embedded multimedia designs and development of feature-rich products.

## Digital and analogue solutions

Analogue processors are used where we require the best quality output. T. Anand, co-founder, Knewron explains, "The thumb rule is, where the quality of audio/video is of prime importance, we go for the analogue processing. The output from an analogue IC is much better than a digitally processed analogue output."

The latest analogue I²C-controlled audio processors offer a wide range of features that are suitable for stereo and multichannel applications. These can save costs and enhance the audio signal chain of the designs. Also, these devices with integrated features such as digital volume and balance control, surround sound and tone controls, further enhance the designs.

These surround or other multichannel formats are appropriate for producing virtualised 3D sound for two-speaker systems. Also, there are 3D audio processors which can create five-speaker surround sound from a two-channel stereo source.

Although digital processing can be lossy, the advent of efficient and powerful digital processors is an alternative to noise-prone analogue processing. Praveen Ganapathy, director, Business Development, Texas Instruments, India says, "Anything in the real world is analogue, so traditionally we could do processing in analogue domain; the only challenge is analogue domain is prone to a lot of noise. So we take the inputs in analogue form and then convert them into digital, process in the digital domain and then again convert to analogue form for the output."

Digital audio processors offer more versatile handling of audio/video streams. Echo cancellation and noise suppression DSP software technology is enhancing the audio quality of wireless products while increasing versatility in multimedia application processor families is allowing developers to design a wide range of end products with minimal incremental PCB design effort. Now you can switch sample rates without changing coefficient and have more flexible designs with the new simplified multichannel designs in digital audio processors.

## Modernised system on chips (SoC) solutions

On one hand there is a wide range of fully integrated smart TV SoCs, supporting full HD through the high resolution best suited for 3D graphics and 3D gaming. On the other hand there are scalable processors with affordable ARM architecture solutions. These offer a broad range of performance, price and power consumption to meet just about every need, and also include video accelerators, advanced graphics and display capabilities and high-speed connectivity with a rich set of peripherals that are optimised for a broad spectrum of digital video end equipment.

***Consumer.*** SoCs with ARM architectures plus built-in hardware video accelerator engines are the solutions for applications such as tablets and mobile phones. "The mobile phone budget cannot afford so many dedicated chipsets for analogue-to-digital (A/D) conversion, codecs and for transmission. When you talk of an SoC, it develops a balance between the cost, performance and power, providing the complete ecosystem with the associated software at a good price that can fit into the mobile phone or a tablet," says Avinash Babu, senior architect, Mistral Solutions.

***Automotive.*** For automotive multimedia designs which have been gaining popularity, the multi-tuner RFCMOS single-chip solutions with embedded AM, FM and DAB tuners offer a combined car radio and audio system fully integrated on a single IC. These can help you build the system with significantly reduced system costs via a reduced bill of material (BOM).

Time to market is also a very important factor for the designers. Gaurav Kapoor, sales manager, Intersil Corp, India, says, "There are simple low-cost controllers that help designers to kick start design and time to market, as there are no software protocols required since these devices can run by setting the simple register mapping."

These controllers can be best suited for simple automotive safety applications such as rear-view camera display where, instead of having complex software-based controllers for the interaction with the display devices, you can use these dedicated LCD controllers for straight connection with digital LCD panel. You can thus make the solution ready within a couple of weeks and production ready within a few months because of simpler designing.

***Critical applications.*** Talking

about surveillance and portable processing needs for weapon-mounted sights, handheld range and target finders, and unmanned air or ground platforms, the module should first meet the demanding size, weight and power constraints. The combination of dedicated image-processing cores and an abundance of peripherals in a single integrated circuit has resulted in all-in-one image processors with a general-purpose computer. These can be useful for performing other critical non-vision tasks, such as flight control and system-to-system communication.

The optimised real-time vision-processing hardware performs operations such as noise reduction, image enhancement, image fusion, stabilisation and object tracking.

## HDMI transceivers

These transceivers have evolved offering flexibility for your designs. These allow you to separate the audio from video or *vice versa*. Such transceivers let the video pass through and bring out a compressed audio on the device for DSP to process. A good thing about such devices is that these are not only useful for home audio and video but also for professional AVs.

Subramanyam of Analog Devices, India says, "You can take the audio out from these transceivers and reinsert it back, which is a kind of requirement for studio equipment. It offers a kind of great flexibility, taking audio from one channel and putting audio and video on different locations."

## Smart amplifiers

An amplifier is an integral part of an audio system. Digital amplifier products, where analogue quality performance, reduced size and improved energy efficiency are at premium, have been the focus of the market in recent times. As a result, the 'smart' amplifiers have surfaced for helping the design engineers. These smart amplifiers amplify the signal with constant monitoring of the functional device, thereby protecting it from damage and at the same time ensuring the quality of the output.

Ganapathy explains, "The smart amplifier technology allows you to have a 5W speaker with 10x the range without damaging the speakers, so with 5W you can have the 50W experience and thus have more compact designs. It continuously monitors speaker characteristics and responds accordingly; this is how you get good audio tones without damaging the speakers."

Over the years use of smart devices has become common, but the potential interference they generate has always retarded the aim of providing an excellent sound performance. The new amplifiers that have come up for the smart devices, provide increased GSM robustness to mitigate the influence of smartphones on loudspeakers, resulting in a cost-effective solution that improves sound quality.

## IDEs for better designing

In the recent times, IDE software with feature-rich GUI for the embedded processor families has been the focus of many leading chip vendors. These employ the latest generation of mature code-generation tools and provide seamless, intuitive C/C++ and Assembly language editing, code-gen and debug supports, thereby making processor selection and product design more engineer friendly.

Subramanyam says, "Historically what used to happen was, if you were to create a sound bar or an AVR, you would tend to have the audio engineer and the software engineer sit together and try to choose the product. But in this case the graphical user interface offered for these DSPs enables the audio engineer to change the characteristics of various builders or the crossovers."

Additionally, the advanced algorithms for video processing have evolved for noise reduction as well as image formatting and conversion. The image enhancement algorithms add details to low-resolution images and adjust colour and contrast giving crisp, clear images on your display.

These advanced algorithms and encodings are reducing the computations, thereby reducing the power consumptions as well. Babu says, "On the way, people are trying to reduce power consumptions using accelerators, which are built using higher silicon technologies, and reducing the amount of data payload through advanced encodings."

## Energy consumption

Managing the energy consumption is a major challenge for the application design technology today. Subramanyam says, "Energy consumption is a very important aspect of the consumer electronics industry today. The reason being, when you are watching the TV and you put it on standby, or if you put your audio system on standby, you would like the standby power of these devices to be very low. Most of the DSPs that we design have a full operational mode and then a standby mode. The standby mode helps in saving power."

"We have ICs ranging from a few nanoamperes to a few milliamperes—it differs from product to product. And the market is pretty sensitive to the products which have sleep modes, hibernation modes, etc," he adds.

## Other modules

We all know how important are analogue-to-digital converters (ADCs) and digital-to-analogue converters (DACs) for any signal processing system. These become essential while processing analogue signals such as voice or speech, and are used for enhancing voice processing features such as noise suppression, acoustic echo cancellation and multichannel beamforming. They also offer improved performance in voice capture processing such as voice control and recognition. Other applications such as digital set-top box systems, digital video camcorders, smartphones and tablets operating with digital signals are also designed with reliable, low-power and high-performance ADCs.

We have single packages for sampling, A/D conversion and anti-alias filtering, generating 24-bit values for both left and right inputs in serial form at sample rates up to 200kHz per channel. Most of the packages employ fifth-order, multi-bit delta sigma modulator followed by digital filtering and decimation, which removes the need for an external anti-alias filter, thereby reducing the number of components required for the designs. Further, audio/video codecs which combine audio ADCs and DACs into single ICs provide maximum flexibility, features and performance in the multimedia designs.

## The risk factor

Ever-growing and highly-demanding entertainment and multimedia industry poses some risks as well for your designs. The primary one being the reliability and your commitment to future evolutions of the design. Although multi-vendor architecture is a plus point for the designs but a roadmap for the next-generation architectures and compatibility with the future parts will ensure improved integrations and reduced costs for your designs.

Nate Srinath, founder and director, Inxee says, "Every designer should try to mitigate business risk by adopting a multi-vendor capable architecture. The selection process should consider every A/V processor vendor's commitment and roadmap, coupled with technical and reference design support, along with proper software tools to mitigate business risk during developmental stages of the product." ●

*The author is a technical journalist at EFY, Gurgaon*

### What are programmable accelerators?

The industry has been focussing on the hardware accelerators and programmable solutions separately. Hardware accelerators are circuits for computing specific algorithms. They provide very high performance and low power consumption. Hardware accelerators are used for computing standardised video algorithms (for example, video decompression) and some image-processing algorithms. But their huge gate count (silicon area) and no programmability cannot be ignored. Whilst we have multi-core CPUs with or without SIMD or VLIW co-processor extensions, DSPs, GPUs etc are programmable solutions which are primarily used for audio processing, but not so much for video. Although they have good programmability, their performance (acceleration) is low and power consumption is high. Sometimes such programmable solutions are used for certain computationally-intensive image processing/computer vision algorithms as well, despite the above drawbacks, because of the necessity of programmability.

But we now have programmable accelerators which provide high performance and low power consumption, just like hardware accelerators along with the programmability features of the solutions mentioned above.

"Our invention universal multifunction accelerator (UMA) has high performance and low power consumption, akin to hardware accelerators but with programmability of programmable solutions," says Dr Veenu Kandadai, co-founder, Manjeera Digital Systems.

# Thermoelectric Refrigerator

EFY ABHIJEET RAI TESTED

**SAMEER GHEWARI**

As summers are approaching, everyone would need a refrigerator. In many cases, people cannot afford a regular-size refrigerator. Especially students staying in a hostel can neither afford it nor would like to carry such a big appliance along with them when they leave. Also, these refrigerators consume power to the tune of 500W, which is not allowed in most hostels.

Presented here is a thermoelectric refrigerator that can be built with easily available off-the-shelf components for approximately ₹ 1200. The refrigerator consumes only around 60W of power. There is also a control system in the refrigerator that monitors and controls the temperature. The overall size is small, so it can be kept quite comfortably in a small hostel room. Fig. 1 shows the author's prototype and the rough overall architecture.

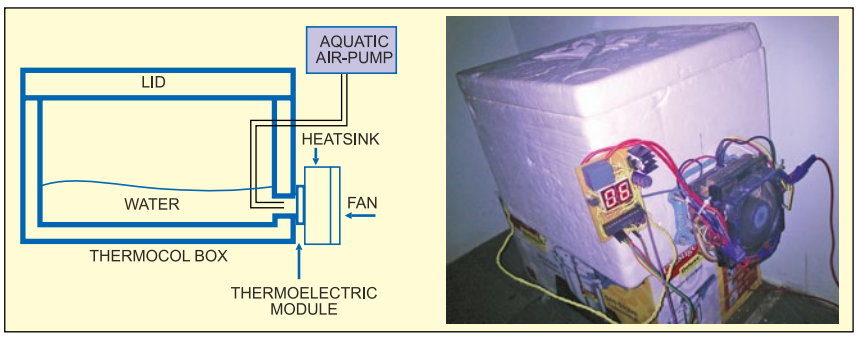


*Fig. 1: Screenshot of the author's prototype and the rough overall architecture*

## Circuit and working

Fig. 2 shows the circuit diagram of the thermoelectric refrigerator. The

### Test Points

| Test point | Details |
|---|---|
| TP0 | 0V, GND |
| TP1 | 5V (with regards to TP0) |
| TP2 | 12V (with regards to TP0) |
| TP3 | Voltage corresponding to temperature (10mV/°C) |
| TP4 | Pulse when the program is running |
| TP5 | Pulse when the program is running |
| TP6 | High to enable the relay RL1 |
| TP7 | Low when S1 is pressed |

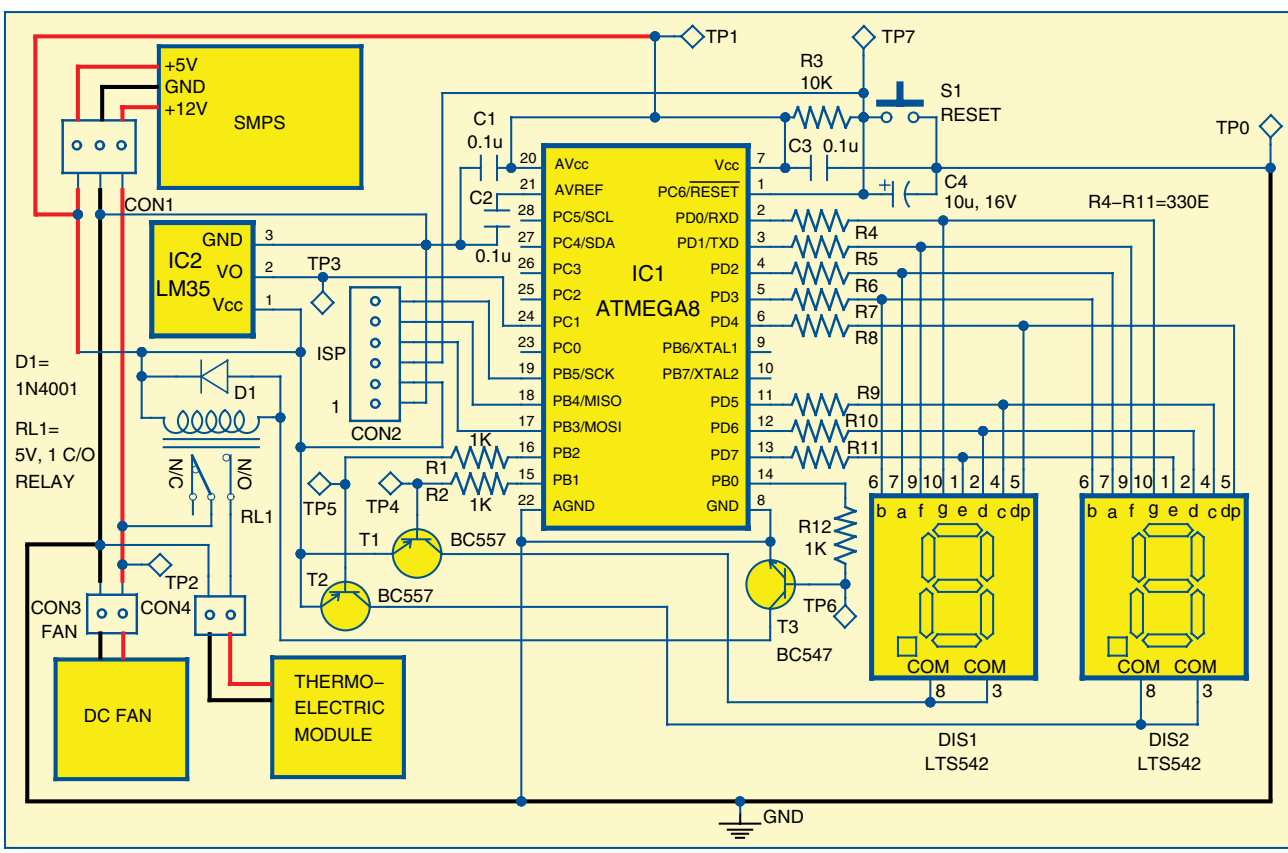


*Fig. 2: Circuit diagram of the thermoelectric refrigerator*

circuit is built around microcontroller ATmega8 (IC1), temperature sensor LM35 (IC2), thermoelectric module TEC1-12706 (connected at CON4), desktop computer's SMPS (connected at CON1), DC fan (connected at CON3), 7-segment displays (DIS1 and DIS2) and relay (RL1).

The complete circuit is powered by desktop computer's SMPS. 12V and 5V outputs from the SMPS are connected at CON1. 5V supply is used to power microcontroller IC1 and rest of the circuit, while 12V is used for the DC fan and thermoelectric module.

***Thermoelectric module.*** Actual cooling is done by thermoelectric module TEC1-12706. It works on the principle of Seebeck effect: when current is passed through two dissimilar metal junctions, one junction gets heated while the other junction cools down.

The module is 40×40×3.6mm in size. Although it operates over 4V-16V, recommended operating voltage is 12V. Depending on temperature of hot side, TEC1-12706 is capable of transferring 50-60W of heat. Outer construction of this module is ceramic and the metal junctions are inside along two surfaces. As shown in Fig. 3, the side on which model number is printed is the hot side and the other one is cold side.

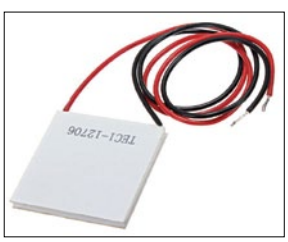

*Fig. 3: Thermoelectric module*

Polarity of voltage is very important; red wire should be connected to 12V and black to ground. If the polarity is reversed, hot and cold sides get reversed as well. Heat produced on the hot side must be dissipated, otherwise the module will heat up beyond limit. We can make use of any heat-sink such as the one used for CPU in a computer. Temperature of hot side has direct effect on how much heat the module can suck from the cold side. Here we have mounted the DC fan over the heat-sink to dissipate heat more efficiently.

***Microcontroller.*** ATmega8 is a low-power CMOS 8-bit microcontroller based on the AVR RISC architecture with throughputs approaching 1MIPS per megahertz. ATmega8 comes with the 8 kilobytes of in-system programmable Flash, 512 bytes of EEPROM, 1 kilobyte of SRAM, 23 general-purpose I/O lines, 32 general-purpose working registers, three flexible timers/counters with compare modes, internal and external interrupts, a serial programmable USART, a byte oriented two-wire serial interface, a 6-channel ADC (eight channels in TQFP and QFN/MLF packages) with 10-bit accuracy, a programmable watchdog timer with internal oscillator and an SPI serial port.

Microcontroller IC1 runs at a clock frequency of 8MHz using an internal oscillator. The thermoelectric module sucks heat from the water inside the refrigerator box and keeps cooling it down. The temperature of water is sensed through temperature sensor IC2 which is interfaced to the microcontroller's ADC pin 24. When the temperature reaches 9°C or above, relay RL1 gets energised and switches on the thermoelectric module. When the temperature reaches 5°C or below, the relay is de-energised and the thermoelectric module is switched off.

Port pins PD0 through PD7 of IC1 are connected to pins g, f, a, b, dp, c, d and e of 7-segment displays, DIS1 and DIS2. Port pins PB1 and PB2 of IC1 drive the base of transistors T1 and T2 for switching on 7-segment displays, DIS1 and DIS2, respectively. The 7-segment displays show the temperature sensed by IC2.

## Software

The software program is written in 'C' programming language and compiled using AVR Studio. The program is burnt in the microcontroller using a suitable programmer.

## Construction and testing

An actual-size, single-side PCB for the thermoelectric refrigerator circuit is shown in Fig. 4 and its component layout in Fig. 5. Assemble the circuit on the PCB to minimise any assembly errors. Use IC base for microcontroller

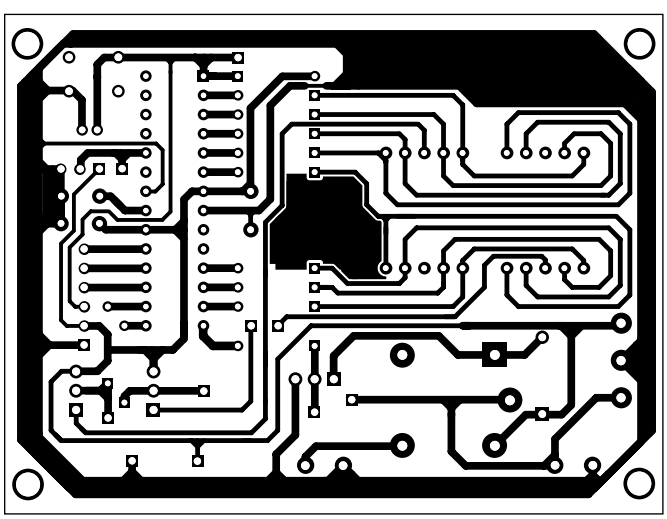
*Fig. 4: An actual-size, single-side PCB for the thermoelectric refrigerator*

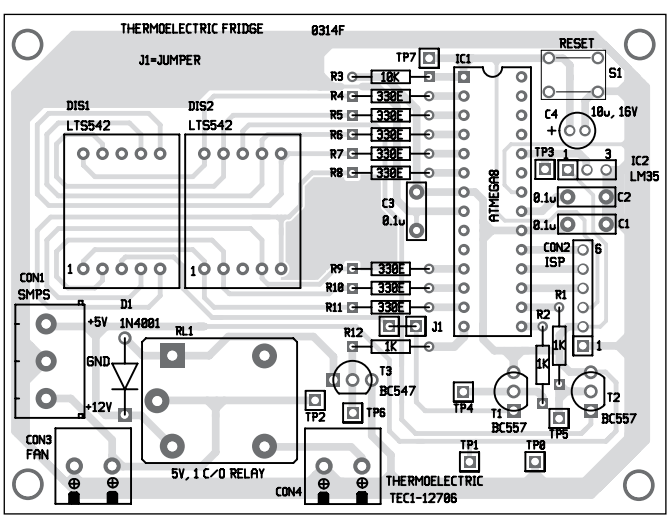

*Fig. 5: Component layout for the PCB*

## PARTS LIST

*Semiconductors:*

| | |
|---|---|
| IC1 | - ATmega8 microcontroller |
| IC2 | - LM35 temperature sensor |
| D1 | - 1N4001 rectifier diode |
| T1, T2 | - BC557 pnp transistor |
| T3 | - BC547 npn transistor |
| DIS1, DIS2 | - LTS542 common-anode 7-segment display |

*Resistors (all ¼-watt, ±5% carbon):*

| | |
|---|---|
| R1, R2, R12 | - 1-kilo-ohm |
| R3 | - 10-kilo-ohm |
| R4-R11 | - 330-ohm |

*Capacitors:*

| | |
|---|---|
| C1-C3 | - 0.1µF ceramic disk |
| C4 | - 10µF, 16V electrolytic |

*Miscellaneous:*

| | |
|---|---|
| CON1 | - 3-pin terminal block connector |
| CON2 | - 6-pin connector |
| CON3, CON4 | - 2-pin terminal block connector |
| RL1 | - 5V, 1 C/O relay |
| S1 | - Push-to-on tactile switch |
| | - Desktop SMPS |
| | - Thermoelectric module TEC1-12706 |
| | - Desktop CPU fan (12V DC) |
| | - Thermocol box |
| | - Aquatic air-pump |

## EFY Note

The source code of this project is included in this month's EFY DVD and is also available for free download on source.efymag.com website.

IC1. Once the PCB is assembled, power it on with the SMPS as shown in Fig. 2. The DC fan should immediately start rotating. Check the voltage levels at various test points as shown in test point table to ensure the circuit is working as required.

***Mechanical construction.*** The mechanical construction is the most critical part of this project. The overall body of the refrigerator is a thermocol box as shown in Fig. 1. This type of box is easily available in the market. Water is used as a coolant because it holds temperature for longer time than air can. An opening is created near the bottom of the box on one side which should be a little bigger in dimension than the thermoelectric module. An aluminium sheet is mounted over the opening from outside as shown in Fig. 6. Ensure that the sheet is firmly fixed and there is no leakage.

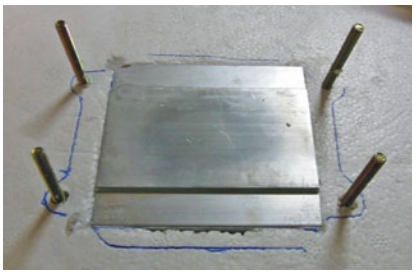

*Fig. 6: Mounting of aluminium sheet over the thermocol box*

*Fig. 7: CPU heat-sink*

Use a silicone sealant or an adhesive to firmly fix the thermoelectric module over the aluminium sheet. The adhesive should not come between the sheet and the module. Now we need to mount a heat-sink over the thermoelectric module to dissipate heat from the hot side. Way of mounting the heat-sink will depend on the type of heat-sink you could obtain.

In our case, we used a spare CPU heat-sink which already had a nice base clip as shown in Fig. 7. The base clip was screwed and glued to the box. Then, the heat-sink was fitted on the base clip with its holding assembly. We also had the fan attached to the heat-sink. The refrigerator should be kept in a well-ventilated place enabling the fan to blow good amount of air on the heat-sink.

Let the adhesive dry properly. For silicone, it takes about 40-50 minutes. Pour in a small amount of water inside the box and see if there is any leakage. In case of leakage, try putting more silicone to fill in the voids. Water level should be equal to the height of opening, so that maximum water comes into contact with the cold side of TEC module.

Water is a good conductor of heat only when it is in liquid form. Once it turns into ice, it will indeed block transfer of the heat. As said above, cold side can go well below 0°C and water near the opening will turn into ice in an hour or two. Once that happens, remaining water in the box will not get any colder. Hence we have to stop formation of ice near the opening.

Simple way of doing it is by using an aquatic air-pump. Pipe coming out from the air-pump is inserted in a box through a small hole at the top. The opening of the pipe from where the air blows out is facing the cold side of thermoelectric module as shown in Fig. 1. In this way, air bubbles do not let ice to form at the opening. Effectively, it creates a motion or water current and helps all of the water to reach the same temperature.

As there is water at the bottom, overall humidity inside the box goes high. Hence food items such as vegetables should be preferably stored in airtight containers or bags, as excessive moisture can ruin them. At least once a week, you should unplug the refrigerator and change water inside the box after cleaning it thoroughly.

***Caution.*** Do not touch the hot side of the thermoelectric module in any case. ●

*The author is an electronics engineer and hobbyist*

# Real-Time Clock with Temperature Logger


**SANJIB BHUIYA**

Presented here is a simple real-time clock with temperature logger. The project shows time, date and real-time temperature on the LCD. The logger records the maximum and minimum temperature for each day and can keep entries for 51 days. The recorded temperatures can be viewed any time together with the dates. The temperature is sensed via single-wire temperature sensor and the maximum and minimum temperatures for each day are stored in EEPROM via I²C protocol. Fig. 1 shows the author's prototype.

## Circuit and working

Fig. 2 shows the circuit diagram of real-time clock with temperature logger. The circuit is built around microcontroller PIC18F452 (IC1), serial I²C real-time clock DS1307 (IC2), EEPROM AT24C02 (IC3), single-wire temperature sensor DS18B20 (SENSOR1) and 16×2 LCD.

Transformer X1 is used to power the circuit. The secondary of X1 is fed to bridge rectifier BR1 which is a general-purpose 1A bridge rectifier. The rectified output is filtered through capacitor C1 and fed to 5V regulator IC4 to get a regulated 5V supply to power the circuit. LED1 is used to indicate the input power status of the circuit and current through it is limited by resistor R1.

***Single-wire temperature sensor.*** The real-time temperature is sensed by single-wire digital thermometer DS18B20. The sensor provides 9-bit to 12-bit Celsius temperature measurements and has an alarm function with nonvolatile user-programmable upper and lower trigger points. DS18B20 communicates over a single-wire bus that by definition requires only one data line (and ground) for communication with a central microprocessor. It has an operating temperature range of -55°C to +125°C and is accurate to ±0.5°C over the range of -10°C to +85°C. In addition, the DS18B20 can derive power directly from the data line ('parasite power'), eliminating the need for an external power supply. But we have powered it externally for this project. The DQ pin 2 of the sensor DS18B20 is interfaced to port pin RC1 of microcontroller IC1 using single-wire protocol through a pull-up resistor R2. Single-wire protocol was developed by Maxim Integrated; it needs only one wire for communication and we can connect many devices with a single wire and access each of them separately according to our need.

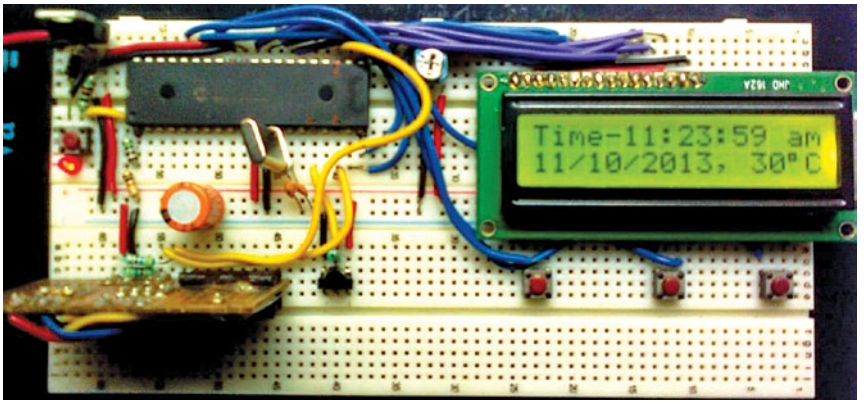


*Fig. 1: Author's prototype*

***Real-time clock.*** Serial I²C-based real-time clock DS1307 provides the current date and real time to be displayed on the LCD. DS1307 is a low-power, full BCD clock/calendar with 56 bytes of NV SRAM. Address and data are transferred serially through I²C bi-directional bus. The clock/calendar provides seconds, minutes, hours, day, date, month and year information. The end of the month date is automatically adjusted for months with less than 31 days, including corrections for leap year. The clock operates in either the 24-hour or 12-hour format with AM/PM indicator. The DS1307 has a built-in power sense circuit which detects power failures and automatically switches to the battery supply. A 32.768kHz crystal oscillator provides clock to DS1307 and a 3V battery connected at pin 3 provides the backup

**PARTS LIST**

| | |
|---|---|
| *Semiconductors:* | |
| IC1 | - PIC18F452, microcontroller |
| IC2 | - DS1307, RTC |
| IC3 | - AT24C02, EEPROM |
| IC4 | - 7805, 5V regulator |
| SENSOR1 | - DS18B20, 1-wire digital thermometer |
| LED1 | - 5mm LED |
| LCD1 | - 16×2 LCD |
| BR1 | - Bridge rectifier module, 1A |
| *Resistors (all 1/4-watt, ±5% carbon):* | |
| R1 | - 680-ohm |
| R2, R7-R9 | - 4.7-kilo-ohm |
| R3 | - 10-kilo-ohm |
| R4, R5 | - 2.2-kilo-ohm |
| R6 | - 100-ohm |
| VR1 | - 10-kilo-ohm preset |
| *Capacitors:* | |
| C1 | - 470µF, 25V electrolytic |
| C2 | - 0.1µF ceramic |
| C3 | - 10µF, 16V electrolytic |
| C4, C5 | - 22pF ceramic |
| *Miscellaneous:* | |
| X1 | - 230V AC primary to 12V, 500mA secondary transformer |
| S1-S4 | - Tactile switch |
| $X_{TAL}1$ | - 10MHz crystal oscillator |
| $X_{TAL}2$ | - 32.768kHz crystal oscillator |
| BATT.1 | - 3V battery |
| CON1 | - 2-pin terminal block connector |

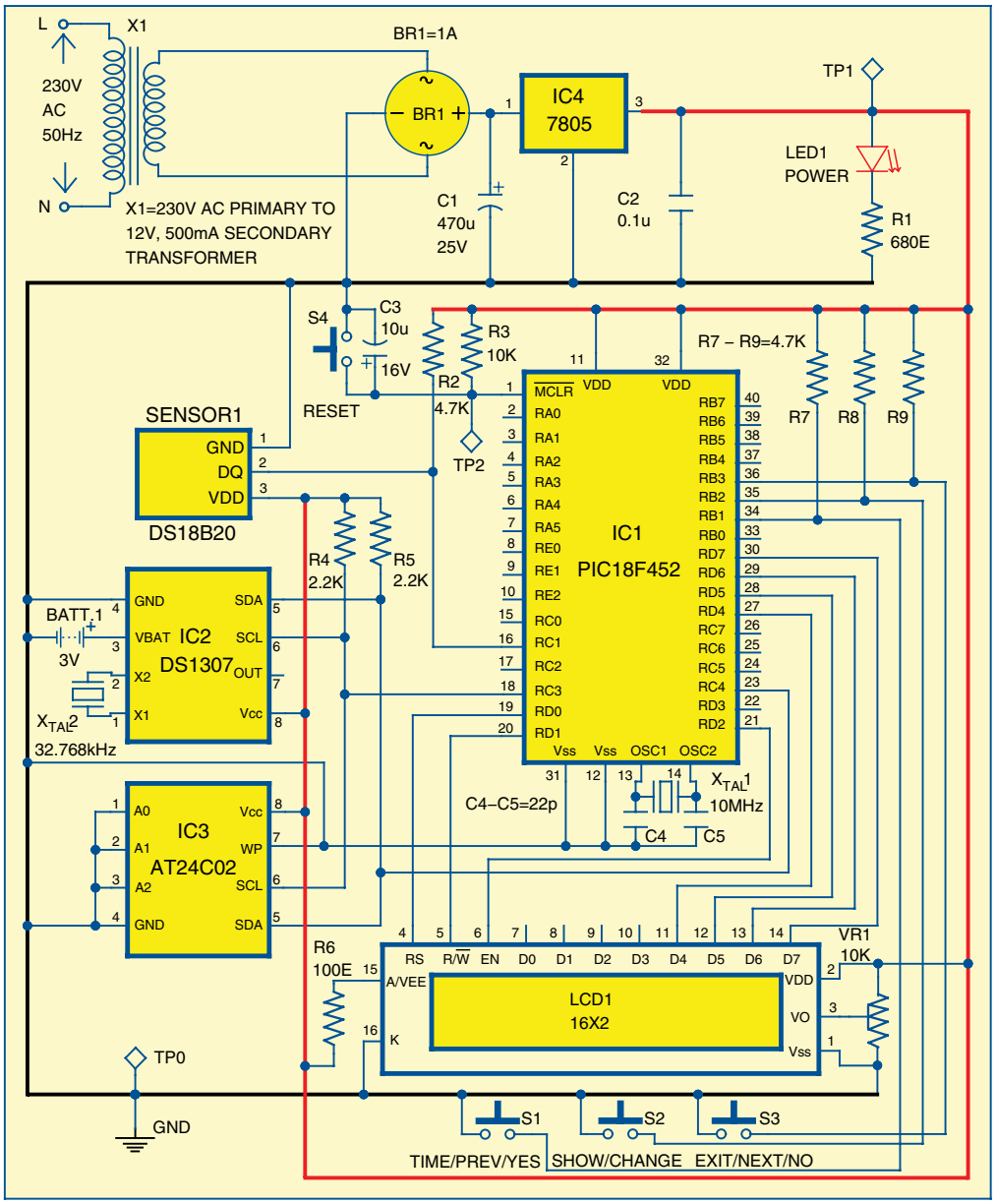


*Fig. 2: Circuit diagram of real-time clock with temperature logger*

## Test Points

| Test point | Details |
|---|---|
| TP0 | 0V, GND |
| TP1 | 5V |
| TP2 | Low when S4 is pressed |

supply when Vcc is not present. The SCL and SDA pins of DS1307 are interfaced to port pins RC3 and RC4 of microcontroller IC1 through pull-up resistors R4 and R5, respectively.

***EEPROM.*** The minimum and maximum temperature of each day is stored in serial EEPROM AT24C02. It provides 2048 bits of serial electrically erasable and programmable read-only memory (EEPROM) organised as 256 words of 8 bits each. The device is optimised for use in many industrial and commercial applications where low-power and low-voltage operation is essential. The microcontroller IC1 logs maximum and minimum temperatures for each day in EEPROM. If the EEPROM gets full, it shifts the contents of EEPROM by five positions to log new data. Address pins A0, A1, A2 of EEPROM AT24C02 are connected to ground and the serial communication pins SCL and SDA are interfaced to RC3 and RC4 of microcontroller IC1.

***Microcontroller.*** PIC18F452 is the brain of the complete system. It is a powerful 10 MIPS CMOS FLASH-based 8-bit microcontroller and is upwards compatible with the PIC16C5X, PIC12CXXX, PIC16CXX and PIC17CXX devices, thus providing a seamless migration path of software code to higher levels of hardware integration. The PIC18F452 features a 'C' compiler-friendly development environment, 256 bytes of EEPROM, self-programming, an ICD, two capture/compare/PWM functions, eight channels of 10-bit analogue-to-digital (A/D) converter. Its synchronous serial port can be configured as either 3-wire serial peripheral interface or the 2-wire inter-integrated circuit bus and addressable universal asynchronous receiver transmitter.

The microcontroller continuously reads date and time from I²C-based real-time clock IC2, temperature from single-wire digital thermometer SENSOR1 and shows them on the LCD. It also logs the maximum and minimum temperatures of the day in twin-wire serial EEPROM IC3. Port pins RD4 though RD7 of IC1 are connected to data pins D4 though D7 of LCD1, respectively. Port pins RD0 through RD2 of IC1 are connected to control pins RS, R/$\overline{W}$ and EN of LCD1. Multifunction switches S1 through S3 are connected to port pins RB1 through RB3 of IC1.

## Software

The software program is written in 'C'

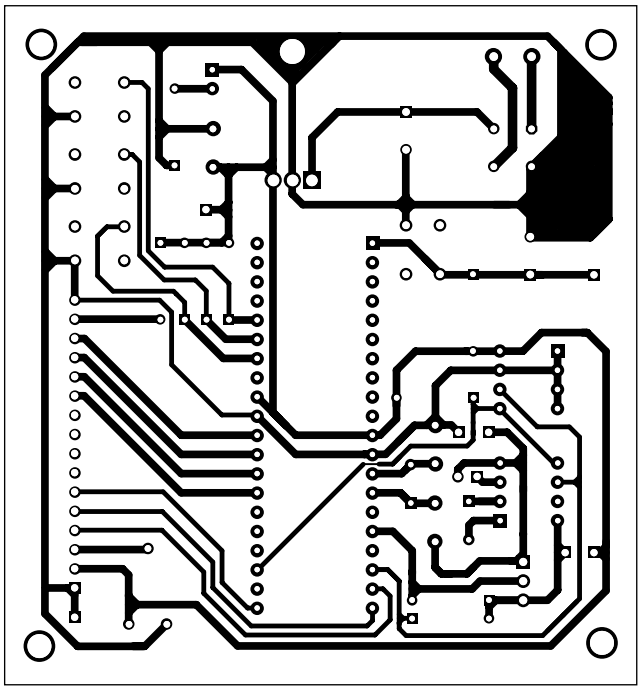

*Fig. 3: An actual-size, single-side PCB for real-time clock with temperature logger*

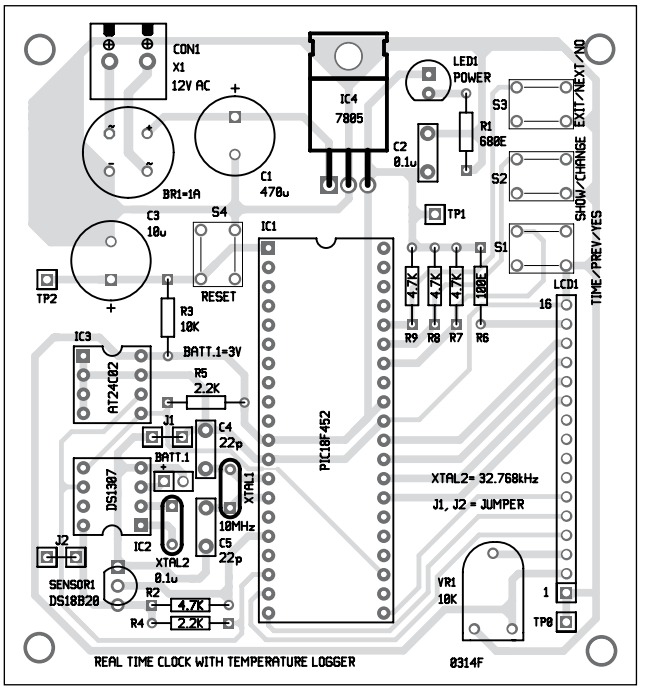


*Fig. 4: Component layout for the PCB*

language and compiled using MPLAB IDE. MPLAB IDE is a compiler for PIC. The program is burnt in the microcontroller using a suitable PIC programmer. Following fuse bytes are forced through source code:

```
#pragma config OSC=HS,OSCS=OFF
#pragma config PWRT=ON,BOR=ON,BORV=45
#pragma config WDT=OFF,LVP=OFF
#pragma config DEBUG=OFF,STVR=OFF
```

## Construction and testing

An actual-size, single-side PCB for the real-time clock with temperature logger circuit is shown in Fig. 3 and its component layout in Fig. 4. Assemble the circuit on the PCB to minimise assembly errors. Use IC base for microcontroller IC. To test the circuit for proper functioning, verify the voltage levels as shown in the test points table.

When the system is turned on for the first time, it shows a welcome message, and after that it shows screen like the one in Fig. 5 because RTC is off. We now have to set time in it. To set the time, press any of the switches and the display will show options as in Fig. 6.

Now press switch S1 and the display changes to as shown in Fig. 7.

You can navigate the cursor by pressing switch S1 for left and S3 for right. To change a digit, press switch S2. After setting all the digits, press S3 again to write this time in RTC as shown in Fig. 8.

Now press S1 or S3 as your wish. If you choose S1, EEPROM will be cleared. Refer Fig. 9.

It will take a couple of seconds to clear the EEPROM. After clearing the EEPROM, the system will display time, date and temperature as shown in Fig. 11.

To see logged temperature, press any key while the system is showing time and date. It will show the display as in Fig. 6. Now choose S2 for SHOW LOG option; it will show most recent logged data as in Fig. 12.

This means:

Date of log: 17/01/14

Minimum temperature: 14°C

Maximum temperature: 15°C

You can see other logged data of previous or next day by pressing S1 or S2 switches. Press S3 switch to exit from log. ●

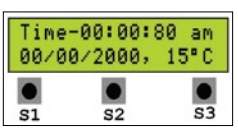


*Fig. 5: Display when RTC is off*

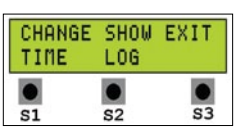


*Fig. 6: Time setting menu*

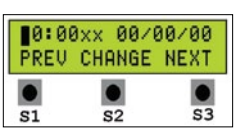


*Fig. 7: After pressing S1*


*Fig. 8: Write in RTC*

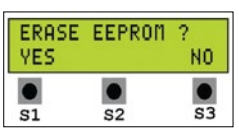


*Fig. 9: EEPROM erasing menu*


*Fig. 10: Erasing EEPROM in progress*

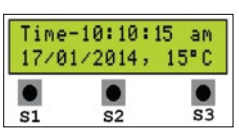


*Fig. 11: Time, date and temperature display*

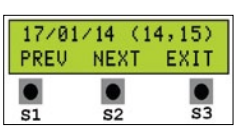


*Fig. 12: Logged data display*

### EFY Note

The source code of this project is included in this month's EFY DVD and is also available for free download on source.efymag.com website.

*The author is working as a telecom technical assistant at Bharat Sanchar Nigam Limited, Kolkata*

# Safety Timer for Home Appliances

ABHISHEK KUMAR

When power requirement in certain areas increases, it tends to put an extra burden on the power station distributing power, which can lead to over and under voltage issues within those areas. This situation of over and under voltages is not good for home appliances such as TV, refrigerator, computer and water motor as all of them should run only within a safe range of input voltage to ensure their long life and functionality.

This project not only ensures under and over voltage cutoff, but also displays the mains voltage over LCD. The device is equipped with a delay timer which allows it to re-start only after a period of time elapses. This ensures safety for conditions when the voltage drops or rises very rapidly and can harm sensitive appliances. Re-start time is selectable from 30 seconds to a maximum of 4 minutes.

The under and over voltage cut-off limits are programmable and the user can change them according to the load voltage endurance. When the mains input voltage leaves the safe operating area, the output load is immediately turned off and the user is warned through audio-visual indication. The device works satisfactorily from 100V to 300V. The unit is also equipped with a temperature sensor that senses the room temperature, which is displayed on the LCD.

Fig. 1 shows the author's prototype and Fig. 2 shows the overall block diagram.

## Circuit and working

Fig. 3 shows circuit diagram of the safety timer for home appliances. It is built around microcontroller ATmega8 (IC1), LM35 temperature sensor (IC2), 15V, 500mA and 12V, 1A step-down transformers (X1 and X2, respectively), 5V voltage regulator 7805 (IC3) and LCD.

Transformer X2 is used to power the circuit. The secondary of X2 is connected to BR2, which is a general-purpose 1A bridge rectifier. The DC output is filtered through capacitor C1 and fed to 5V regulator IC3 to get regulated 5V rail to power all the components including microcontroller. For stability of IC3, electrolytic capacitor C2 and ceramic capacitor C3 are used. LED1 is used to indicate the input power status of the circuit; current through it is limited by resistor R1.

Transformer X1 is used to sense the mains input voltage. The secondary output is fed to bridge rectifier BR1 and the DC value is then scaled down using the voltage divider network formed by resistor R3 and preset VR1. The divided voltage is

### PARTS LIST

| | |
|---|---|
| *Semiconductors:* | |
| IC1 | - ATmega8 microcontroller |
| IC2 | - LM35 temperature sensor |
| IC3 | - 7805, 5V regulator |
| LED1, LED2 | - 5mm LED |
| D1 | - 1N4001 rectifier diode |
| ZD1 | - 5V Zener diode |
| T1 | - BC547 npn transistor |
| T2 | - BC558 pnp transistor |
| LCD1 | - 16×2 LCD |
| BR1, BR2 | - Bridge rectifier module, 1A |
| *Resistors (all 1/4-watt, ±5% carbon):* | |
| R1 | - 680-ohm |
| R2 | - 330-ohm |
| R3 | - 100-kilo-ohm |
| R4 | - 10-kilo-ohm |
| R5 | - 2.2-kilo-ohm |
| R6 | - 4.7-kilo-ohm |
| VR1 | - 15-kilo-ohm preset |
| VR2 | - 10-kilo-ohm preset |
| *Capacitors:* | |
| C1 | - 2200µF, 35V electrolytic |
| C2, C6 | - 10µF, 16Velectrolytic |
| C3, C5 | - 0.1µF ceramic disk |
| C4 | - 0.47µF ceramic disk |
| *Miscellaneous:* | |
| X1 | - 230V AC primary to 15V, 500mA secondary transformer |
| X2 | - 230V AC primary to 12V, 1A secondary transformer |
| S1-S5 | - Tactile switch |
| CON1, CON2 | - 2-pin 5mm terminal connector |
| PZ1 | - Piezo buzzer |
| RL1 | - 5V, 1 C/O relay |


*Fig. 1: Screenshot of the author's prototype*

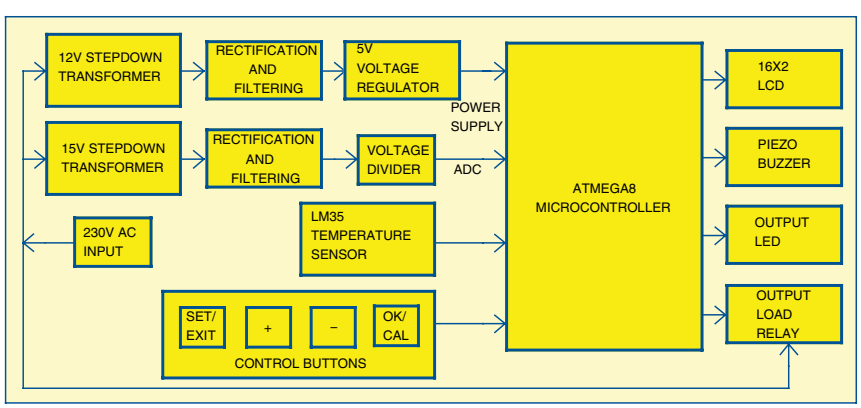


*Fig. 2: Block diagram of safety timer for home appliances*

then fed to port pin PC2 of microcontroller IC1. Capacitor C4 is used for filtering and zener diode ZD1 is used to prevent this voltage from exceeding 5V and burn ADC channel of the microcontroller. The voltage scaling is reconfigurable via preset VR1.

The brain of the circuit, which manages all the input/output and data manipulations, is microcontroller IC1. Pin 21 of IC1 is directly connected to reference input of the ADC unit inside the microcontroller and, because we are using the internal 2.56V reference already built inside the microcontroller, we by-pass this pin to ground using a 0.1µF ceramic capacitor.

Analogue temperature sensor IC2 is used to sense the room temperature. The output pin of IC2 is directly connected to port pin PC0 of IC1 to sense the room temperature and display it on the LCD. For audio alarm indication, a piezo-buzzer with built-in beeping circuit is connected to PB0 of IC1 that produces the alert sound in case of voltage malfunction. To display the output power status, LED2 is connected at port pin PB1 of IC1.

Port pins PD4, PB6, PB7 and PD5 of IC1 are connected to pins D4 though D7 of LCD1, respectively. Port pins PD6 and PD7 are connected to control pins RS and EN while the R/$\overline{W}$ pin is kept low to always keep it in write mode. Pin 15 of LCD1 is driven through transistor T2, whose base is connected to port pin PC4 of IC1 through resistor R6. This enables us to switch on/off backlight of the LCD from the microcontroller. Port pin PB2 is used to drive a power relay for switching on/off the load.

Port pins PD0 through PD3 of IC1 are connected with tactile switches S1 through S4, respectively, to let the user change the settings of the device and to set the under and over voltage cut-off limits of mains input voltage.

Once all the connections are made, switch on the power supply and you will see a welcome message on the LCD for one or two seconds and then the display will revert back to displaying the voltage and temperature as shown in Fig. 4.

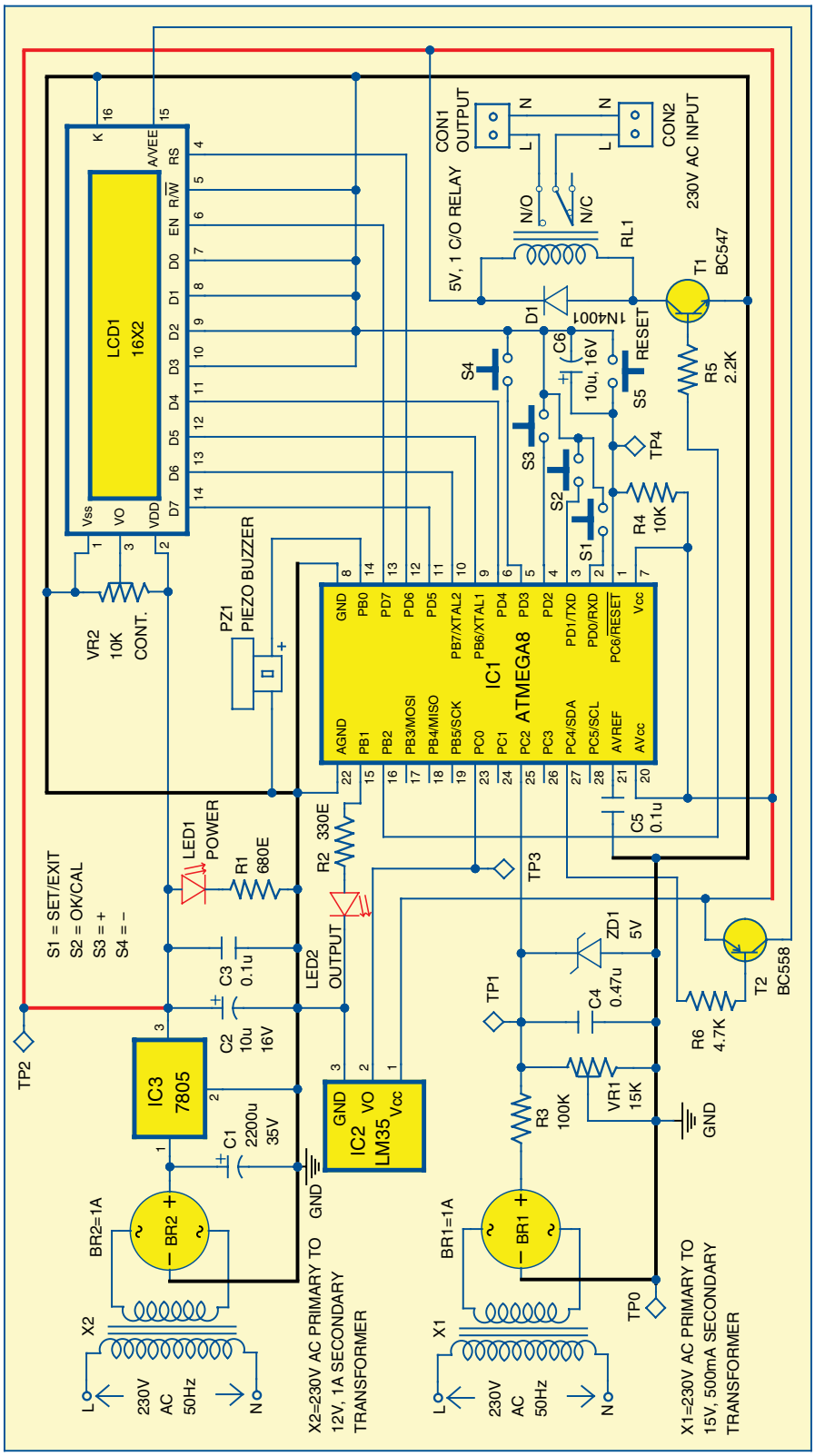


*Fig. 3: Circuit diagram of safety timer for home appliances*

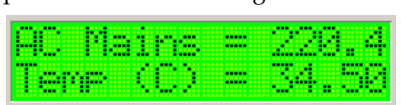


*Fig. 4: Screen display*

**TABLE I**
**Device Setting**

| Display | Description | Function of switches |
|---|---|---|
| LCD backlight? :OFF | Set the LCD backlight on/off | • SET/EXIT—exit the setting menu<br>• PLUS—turn on<br>• MINUS—turn off<br>• OK/CAL—save current setting and jump to next setting menu |
| Beeper? :OFF | Set whether to hear the beep sounds while pressing the buttons | • SET/EXIT—exit the setting menu<br>• PLUS—turn on<br>• MINUS—turn off<br>• OK/CAL—save current setting and jump to next setting menu |
| Irreg mains beep :OFF | Set whether to raise beep alarm in case of voltage malfunction | • SET/EXIT—exit the setting menu<br>• PLUS—turn on<br>• MINUS—turn off<br>• OK/CAL—save current setting and jump to next setting menu |
| Wait time(sec)? :30 | Set the delay time (seconds) | • SET/EXIT—exit the setting menu<br>• PLUS—increase value<br>• MINUS—decrease value<br>• OK/CAL—save current setting and jump to next setting menu |
| Low cutoff? :180 | Set the under-voltage limit (volts) | • SET/EXIT—exit the setting menu<br>• PLUS—increase value<br>• MINUS—decrease value<br>• OK/CAL—save current setting and jump to next setting menu |
| High cutoff? :180 | Set the over-voltage limit (volts) | • SET/EXIT—exit the setting menu<br>• PLUS—increase value<br>• MINUS—decrease value<br>• OK/CAL—exit settings menu |

The default delay time for the unit is set to 30 seconds. LCD1 will be continuously updated with the latest mains voltage and room temperature and the microcontroller will continuously monitor the mains voltage against any over voltage or under voltage. If any excess is detected, the load is switched off and the buzzer sounds to indicate irregular voltage. The load will stay in off state for the preset delay time and switch back on once the delay time elapses.

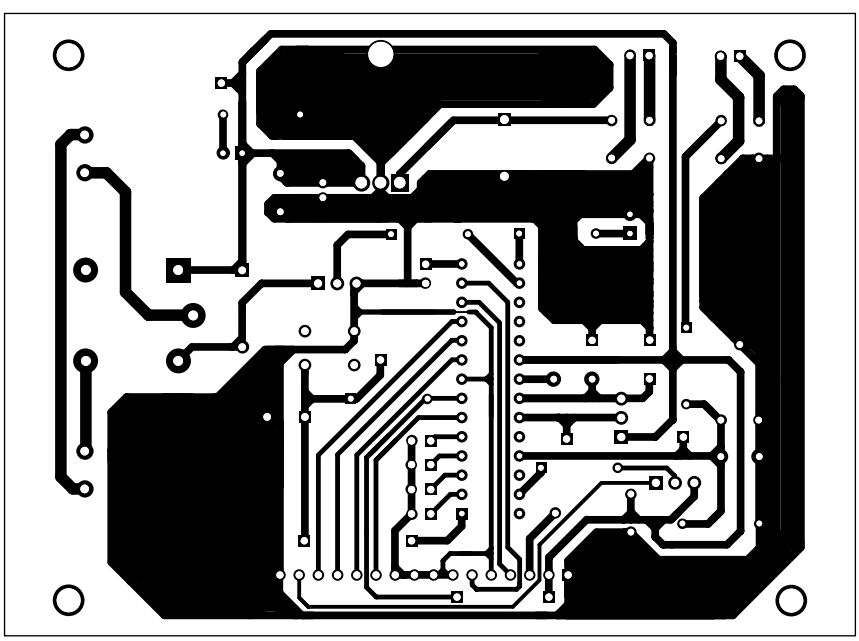

*Fig. 5: An actual-size, single-side PCB for the safety timer for home appliances*

**TABLE II**
**Test Points**

| Test point | Details |
|---|---|
| TP0 | 0V, GND |
| TP1 | 0V-5V depending on AC input (with respect to TP0) |
| TP2 | 5V (with respect to TP0) |
| TP3 | 10mV/°C |
| TP4 | Low when S5 is pressed |

The device settings such as delay time, over-voltage and under-voltage limits can be accessed by pressing the SET/EXIT button. The same button can be used to exit from the settings menu anytime. PLUS (+) and MINUS (-) are used to alter the current setting values. OK/CAL is used to save the settings for the particular setting menu.

Press SET/EXIT to access the device settings. Table I describes the sequential setting menus and function of switches.

## Software

The software program is written in BASIC language and compiled with BASCOM-AVR compiler. It is important to note that the code is developed to run on 1MHz frequency and the internal 1MHz RC internal oscillator is used here. The program is burnt in the microcontroller using a suitable programmer with FUSE BYTE settings mentioned below:

Lfuse-0xE1

Hfuse-0xD9

Burn 'digitimer.hex' file in flash memory section and 'digitimer.eep' file in EEPROM section of the microcontroller which can be downloaded from EFY DVD or source.efymag.com.

## Construction and testing

An actual-size, single-side PCB recommended for the safety timer for home appliances is shown in Fig. 5 and its component layout in Fig. 6. Assemble the circuit on the PCB to minimise as-

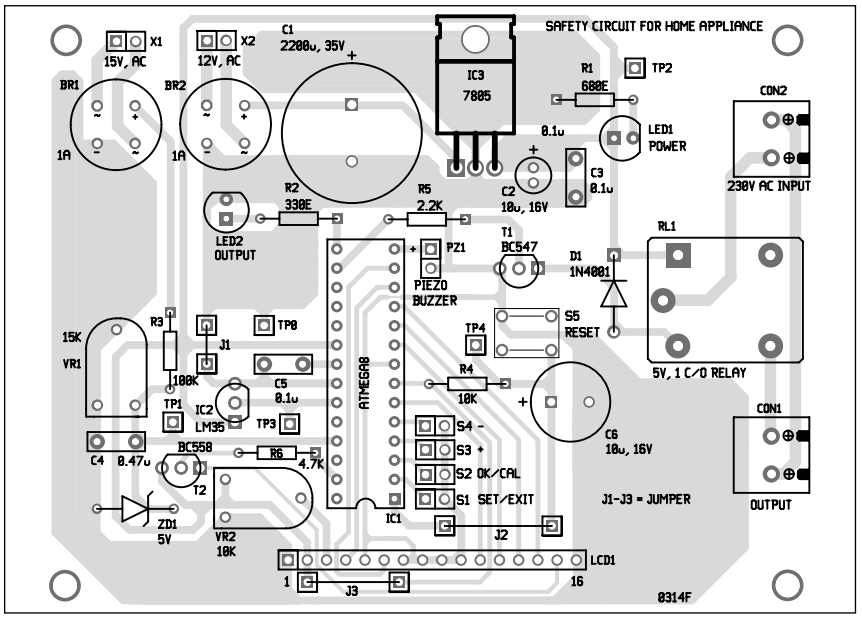


*Fig. 6: Component layout for the PCB*

**TABLE III**
## Software Calibration Procedure

| Steps | Descriptions |
|---|---|
| Step 1 | • Plug your unit and the multimeter into the stabiliser's output. |
| Step 2 | • Press the OK/CAL button for about 2 seconds and observe the calibration menu.<br>Mains AC voltage Calibration Mode<br>(Anytime you want to exit the calibration routine, press SET/EXIT button, but it is not recommended to do so until you complete it.) |
| Step 3 | • The menu will ask to decrease your stabiliser's voltage.<br>Now decrease the input AC voltage<br>• Wait for the next screen (it will pop up automatically after 3 seconds). |
| Step 4 | • Now, first it is recommended to set the stabiliser voltage between 70V and 130V.<br>• Observe the following screen now asking you to set the low point.<br>Set low point: 100<br>• Whatever you set your stabiliser's output voltage (also displayed on your multimeter), enter it here by using the '+' and '-' switches.<br>• After setting, press OK/CAL button again. |
| Step 5 | • Now the menu will ask you to increase the stabiliser's voltage.<br>Now increase the input AC voltage<br>• Wait for the next screen (it will pop up automatically after 3 seconds). |
| Step 6 | • Now it is recommended to set the stabiliser's voltage between 280V and 330V.<br>• Observe the following screen now asking you to set the high point.<br>Set high point: 300<br>• Whatever you set as your stabiliser's output voltage (also displayed on your multimeter), enter it here by using the '+' and '-' switches.<br>• After setting, press OK/CAL switch again. |
| Step 7 | • The device will then show the calculated calibration constants and amend them automatically to its internal sampling routines and will start following them.<br>• 'Calibration Successful!' message at the end will depict calibration success and the display will revert back to main screen. You are done now. |

### EFY Note

The source code of this project is included in this month's EFY DVD and is also available for free download on source.efymag.com website.

sembly errors. Use IC base for microcontroller IC1. The switches should be mounted on a firm base and connected to the PCB through wires. To test the circuit for proper functioning, verify voltage levels as indicated in test point Table II.

## Calibration procedure

For accurate mains voltage measurements and cut-off functioning, the device must be calibrated with respect to the mains voltage. The calibration can be done through hardware or software. The hardware method employs voltage calibration by VR1, while the software method uses the internal software calibration routines with a variable external AC voltage generator or auto-transformer.

For the first time, set VR1 to 10k before powering the unit. Now switch on the unit and observe the mains voltage on the LCD. Connect your multimeter to the mains socket. Now trim VR1 to match the unit's LCD reading to the multimeter's reading, and you are ready to go.

The software method can additionally be used to enhance the accuracy. For software calibration, you will require an external stabiliser or auto-transformer that is capable of providing AC voltages from 100V to 300V or more. Follow the directions shown in Table III and your system is ready to use. ●

*The author is a B.Tech. in electronics and instrumentation*

EFYGROUP
Technology Drives Us

EFY ENTERPRISES PVT LTD

# IPCA-EFYexpo 2014

August 6-8, Pune

Design * Manufacture * Assembly * Training * ELECTRONICS *

INDIAN PRINTED CIRCUIT ASSOCIATION

## Participate in the International Event of the Indian Printed Circuit & Electronic Industry

**PARTCIPANTS WELCOME :**

- PCB Manufacturers
- PCB Designers
- Equipment Manufacturers
- Raw Material suppliers
- Contract Manufacturers (EMS)
- Electronic Industries
- CAD/CAM Software & Service Providers
- Embedded Systems Designers
- Global PCB Associations
- International Trade Delegation
- Print and Media Partners

***EXHIBITION***

***TECHNICAL SEMINARS***

***TRAINING COURSES***

***CEO CONCLAVE***

Venue:
**"AUTO CLUSTER EXHIBITION CENTRE" PUNE, MAHARASHTRA, INDIA**

Dates:
**6 – 8 August, 2014**


**WECC Members & Supporting Organisations:**

KPCA — Korea Printed Circuit Association, Seoul, Korea

JPCA — Japan Printed Circuit Association, Tokyo, Japan

HKPCA — Hong Kong Printed Circuit Association, Hong Kong

CPCA — China Printed Circuit Assocaition, Shanghai, China

TPCA — Taiwan Printed Circuit Association

EIPC — European institute of printed Circuits

IPC — USA

ASSOCIATION CONNECTING ELECTRONICS INDUSTRIES

**Co-Sponsored By:**

- ELCINA
- SMTA
- TEMA
- IESA
- MAIT
- CEAMA
- CLIK

**Organized by :**
**INDIAN PRINTED CIRCUIT ASSOCIATON**
email: ipca@ipcaindia.org website: www.ipcaindia.org

**Marketing & Media Partner:**
**EFY ENTERPRISES PVT LTD**
Call: 08800094213 / email: efyexpo@efyindia.com

# Medicine-Time Reminder

KARUNESH SHUKLA

We are all so busy with our daily lives that we forget to take our medicines on time, which can have several ill effects on our health. The circuit described here helps in making a simple reminder that allows you to set an alert for the medicines that you need to take. The device flashes an LED or rings a buzzer at the selected time intervals. The available time intervals are matched with standard dosing times such as 4, 6, 8, 12, 24 and 48 hours for your convenience. A perfect time-interval makes this device a better choice amongst other standard reminders.

EFY S.C. DWIVEDI TESTED

**TABLE I**
**Time Period Selection**

| DIP1 and DIP2 status | Time interval in hours |
|---|---|
| Pins 6 and 7 short | 4 |
| Pins 5 and 8 short | 6 |
| Pins 4 and 9 short | 8 |
| Pins 3 and 10 short | 12 |
| Pins 2 and 11 short | 24 |
| Pins 1 and 12 short | 48 |

## Circuit and working

The circuit diagram of the reminder is shown in Fig. 1. The circuit is built around 14-stage ripple-carry binary counter CD4060 (IC1), 12-stage ripple-carry binary counter CD4040 (IC2), dual 4-input AND gate CD4082 (IC3), quad 2-input OR gate CD4071 (IC4), dual up-counter CD4520 (IC5) and quad 2-input NOR gate CD4001 (IC6).

**TABLE II**
**Test Points**

| Test point | Details |
|---|---|
| TP0 | GND |
| TP1 | 9V |
| TP2 | 2Hz |
| TP3 | A pulse every 30 minutes |

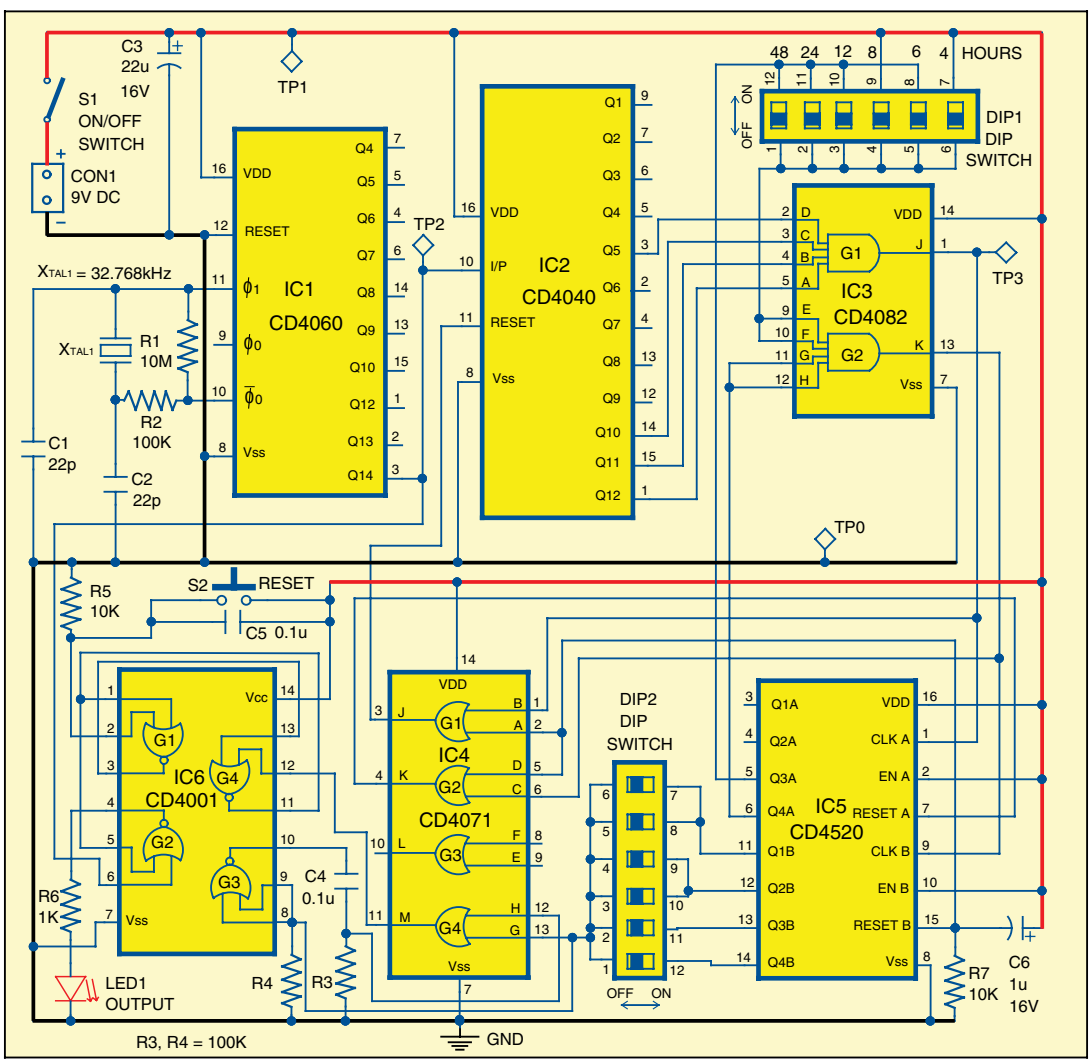


*Fig. 1: Circuit diagram of the medicine-time reminder*

The clock for the system is provided by IC1 wired as an oscillator. This frequency is divided by 16384 ($2^{14}$) by the internal flip-flop chain of IC1 and a 2Hz stable clock frequency is available at its pin 3. Counter IC2 and 4-input AND gate G1 of IC3 are wired to divide the 2Hz clock by 3600. So, a pulse every 30 minutes is available at pin 1 of IC5.

Further division by IC5 is controlled by G2 of IC3 and the positions of DIP1 and

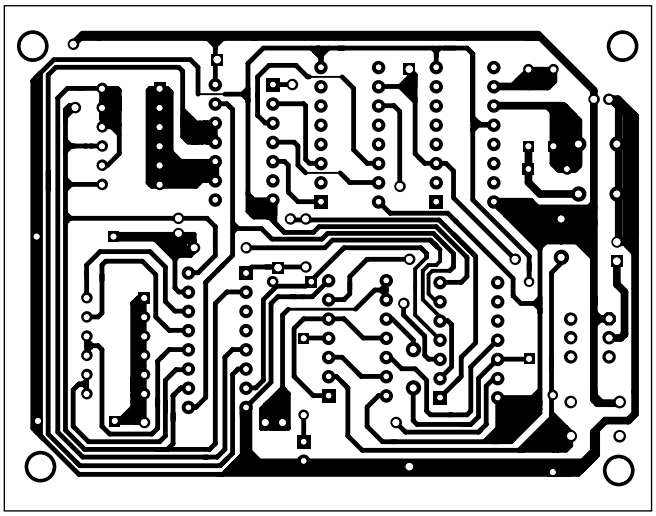

Fig. 2: An actual-size, single-side PCB for the medicine-time reminder

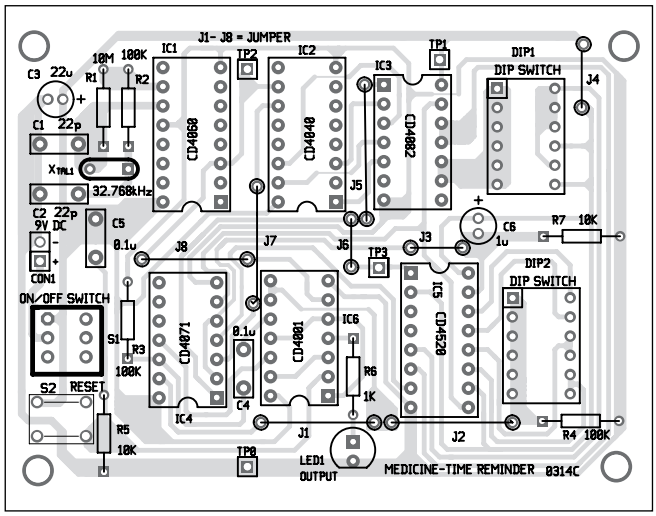


Fig. 3: Component layout for the PCB

## PARTS LIST

*Semiconductors:*

| | |
|---|---|
| IC1 | - CD4060 14-stage ripple carry binary counter |
| IC2 | - CD4040 12-stage ripple carry binary counter |
| IC3 | - CD4082 dual 4-input AND gate |
| IC4 | - CD4071 quad 2-input OR gate |
| IC5 | - CD4520 dual upcounter |
| IC6 | - CD4001 quad 2-input NOR gate |
| LED1 | - 5mm red LED |

*Resistors (all 1/4-watt, ±5% carbon):*

| | |
|---|---|
| R1 | - 10-mega-ohm |
| R2-R4 | - 100-kilo-ohm |
| R5, R7 | - 10-kilo-ohm |
| R6 | - 1-kilo-ohm |

*Capacitors:*

| | |
|---|---|
| C1, C2 | - 22pF ceramic disk |
| C3 | - 22µF, 16V electrolytic |
| C4, C5 | - 0.1µF ceramic disk |
| C6 | - 1µF, 16V electrolytic |

*Miscellaneous:*

| | |
|---|---|
| $X_{TAL}1$ | - 32.768kHz |
| CON1 | - 2-pin connector |
| S1 | - On/off switch |
| S2 | - Tactile switch |
| DIP1, DIP2 | - 12-pin DIP switch |
| | - 9V PP3 battery/9V, 500mA regulated supply |

DIP2 switches. The positions of DIP1 and DIP2 allow selection of 4, 6, 8, 12, 24 and 48-hour time intervals. The set-reset flip-flop formed by G1 and G4 of IC6 is set through G4 of IC4 each time a low-to-high transition is there at the pin of IC5 selected by DIP2. When the flip-flop is set, gate G2 of IC6 is enabled and the 2Hz frequency available at pin 3 of IC1 becomes available at pin 4 of IC6, causing LED1 to flash. The flip-flop can then be reset by means of S2. A master reset is automatically done at power-on by means of C6 and R7. Refer Table I for selecting the time periods.

First choose the hour interval using DIP1 and then apply power through S1. After the specified interval of time has elapsed, LED1 will start flashing at 2Hz. This status will last until pushbutton S2 is pressed, but the circuit will continue the counting and LED1 will flash again when the same hour interval as before is reached. An important feature of this circuit not found in similar devices is that the internal counter is not reset when S2 is pressed, which allows a better time-interval precision.

## Construction and testing

An actual-size, single-side PCB for the medicine-time reminder circuit is shown in Fig. 2 and its component layout in Fig. 3.

After assembling the circuit on a PCB, enclose it in a suitable plastic case such that LED1, S1, S2, DIP1, DIP2 and CON1 stick out. Verify voltage levels on various test points mentioned in the test point table before using the circuit. ●

*The author is currently working at ESP Safety Pvt Ltd, Delhi as a senior hardware R&D engineer. His key interests are analogue circuit design and embedded systems*

# RJ45 Cable Tester

**BHASKAR PANDEY**

Described here is a simple RJ45 cable tester circuit which can be used for testing the RJ45 network cables. The circuit can check both straight-through and crossover-type RJ45 network cables. This is a low-cost tester designed using easily available components. Fig. 1 shows the difference between straight-through and crossover network cables. The tester also indicates the type of cable under test with different sequences in which LEDs glow for both types of cables.

## Circuit and working

Fig. 2 shows the circuit diagram of RJ45 cable tester. The circuit makes use of easily available components such as timer NE555 (IC1), decade counter CD4017B (IC2) and a few other components. IC1 is a popular timer, wired in astable multivibrator mode generating output pulses of around 1Hz at pin 3.

These pulses serve as a clock for decade counter IC2. The outputs O0 through O3 of IC2 go high one after another with the input pulses at pin 14. These are connected to the RJ45 socket CON2 such that a pulse is sent through one leg of each wire-pair and the return legs are connected to ground via LEDs showing the current flow in each pair. Resistors R3 through R6 are used to limit the current through each LED. Output O4 resets the counter IC2 on every fifth clock.

For testing the RJ45 cable, connect the cable between CON2 and

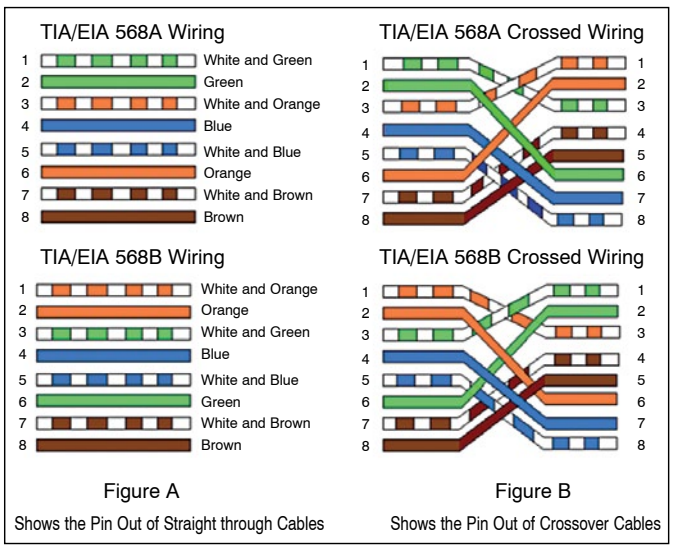


*Fig. 1: Straight-through and crossover network cables*

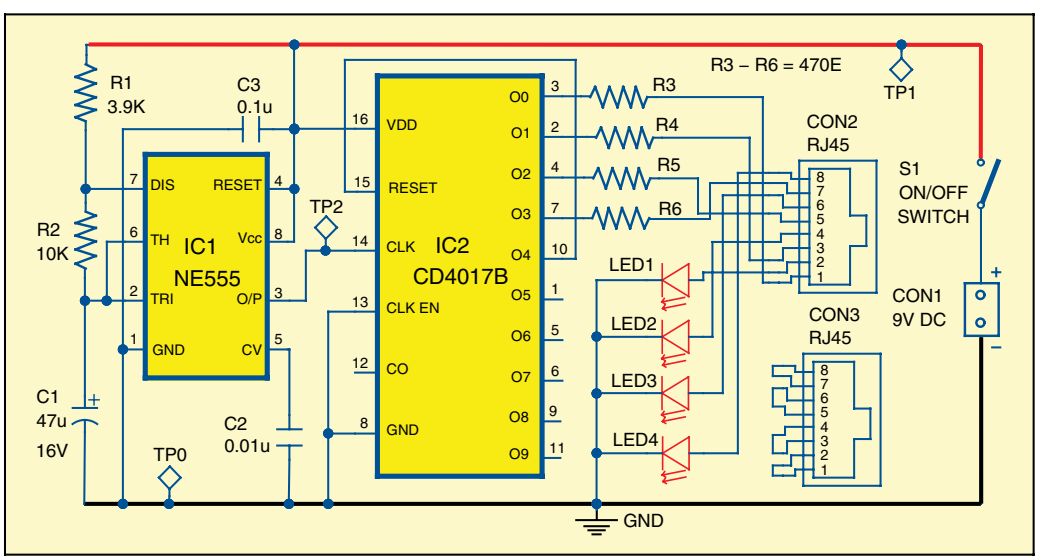


*Fig. 2: Circuit diagram of RJ45 cable tester*

### PARTS LIST

| | |
|---|---|
| *Semiconductors:* | |
| IC1 | - NE555 timer |
| IC2 | - CD4017B decade counter |
| LED1-LED4 | - 5mm red LED |
| *Resistors (all 1/4-watt, ±5% carbon):* | |
| R1 | - 3.9-kilo-ohm |
| R2 | - 10-kilo-ohm |
| R3-R6 | - 470-ohm |
| *Capacitors:* | |
| C1 | - 47µF, 16V electrolytic |
| C2 | - 0.01µF ceramic disk |
| C3 | - 0.1µF ceramic disk |
| *Miscellaneous:* | |
| CON1 | - 2-pin terminal block connector |
| CON2, CON3 | - RJ45 connector |
| S1 | - On/off switch |
| | - 16-pin IC base |
| | - 8-pin IC base |

### TABLE I
### Sequence for Straight-through and Crossover Cables

| Straight-through | Crossover |
|---|---|
| LED1 | LED2 |
| LED2 | LED3 |
| LED3 | LED1 |
| LED4 | LED4 |

### TABLE II
### Test Points

| Test point | Details |
|---|---|
| TP0 | GND |
| TP1 | 9V (when S1 on) |
| TP2 | Around 1Hz |

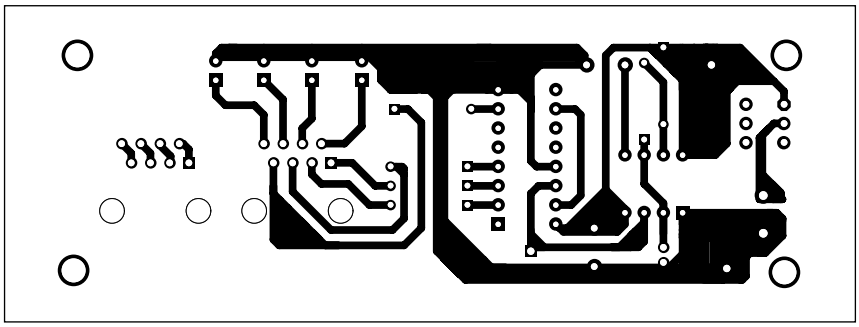

*Fig. 3: An actual-size, single-side PCB for RJ45 cable tester*

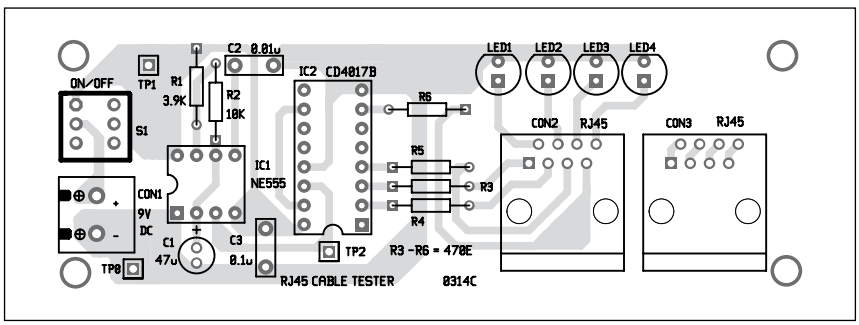


*Fig. 4: Component layout for the PCB*

CON3 and switch on the power supply through switch S1.

If the LEDs glow in the sequence of LED1, LED2, LED3 and LED4, the cable under test is straight-through type and is working well. Similarly, if LEDs glow in the sequence of LED2, LED3, LED1 and LED4, the cable is crossover type and is working well. Refer Table I for the sequence of LEDs.

## Construction and testing

An actual-size, single-side PCB for RJ45 cable tester is shown in Fig. 3 and its component layout in Fig. 4. After assembling the circuit on PCB, enclose it in a suitable plastic case.

Mount all the components on the PCB and enclose it in a plastic cabinet. Make arrangements in the cabinet such that CON1, CON2, CON3, S1 and LED1 through LED4 stick out of the cabinet for proper operation. The circuit is simple and does not require much testing, but do check various voltage levels on test points corresponding to test point table. ●

*The author is an electronics hobbyist*

# Simple Manual PWM Controller

**PETRE TZV. PETROV**

The pulse width modulation (PWM) is used to control electrical loads such as incandescent lamps, LEDs and DC motors. Presented here is a simple manual PWM controller that makes use of IC 74C14 having six inverters with Schmitt triggers to generate PWM signals. You may also use 74HC14, 74AC14 and similar other ICs in place of 74C14 to produce PWM signals.

## Circuit and working

Fig. 1 shows the circuit of a simple manual PWM controller built around hex inverter IC 74C14 (IC1), and Darlington pair transistor TIP122 (T1). The figure also shows different loads that can be connected to CON2 for control through PWM signals.

An oscillator is made using gate N1, the frequency of which can be selected through rotary switch S1. It is preferably to limit the working frequency to well below 30kHz. The limitation comes from the switching speed on transistor T1. Duration of the output pulses is adjusted with potentiometer VR1. Gates N2 through N6 are used to increase the output current of IC1 needed for driving transistor T1. IC 74C14 can provide a few milliamperes of output current and its power supply range is from 3V to 15V. 74AC14 can provide ±24mA per inverter but its power supply range is only from 2V to 6V.

The output current of IC1 is amplified by the transistor, which can be a simple transistor such as BD135, TIP41, 2SD882 or 2N3055. It should preferably be a Darlington transistor such as TIP122, BD681 or BDW93. The output current for the load connected across CON2 depends on transistor T1. Fuse F1 protects the transistor.

Diodes D1 through D4 provide over-current protection for transistor

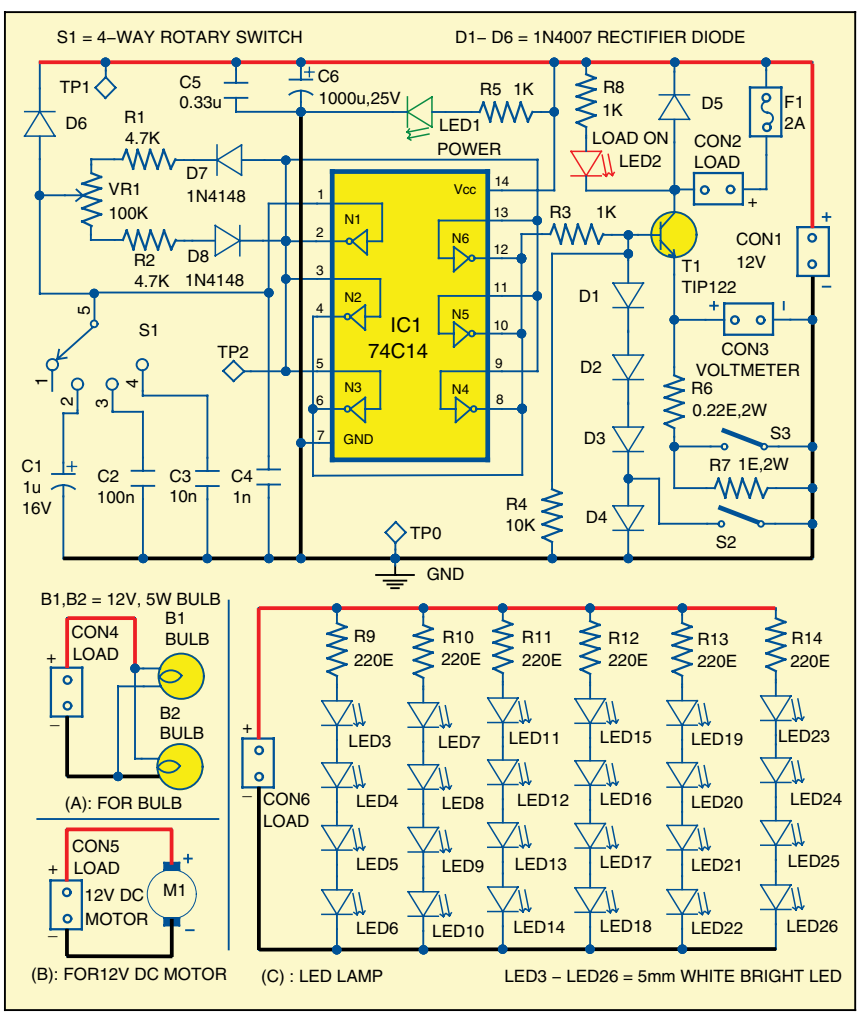


*Fig. 1: Circuit diagram for simple manual PWM controller*

### Test Points

| Test point | Details |
|---|---|
| TP0 | GND |
| TP1 | 12V |
| TP2 | Pulses with frequency selected by switch S1 |

### PARTS LIST

*Semiconductors:*

| | |
|---|---|
| IC1 | - 74C14 hex inverter |
| D1-D6 | - 1N4001 rectifier diode |
| D7-D8 | - 1N4148 signal diode |
| T1 | - TIP122 power transistor |
| LED1 | - 5mm green LED |
| LED2 | - 5mm red LED |
| LED3-LED26 | - 5mm white bright LED |

*Resistors (all 1/4-watt, ±5% carbon, unless stated otherwise):*

| | |
|---|---|
| R1, R2 | - 4.7-kilo-ohm |
| R3, R5, R8 | - 1-kilo-ohm |
| R4 | - 10-kilo-ohm |
| R6 | - 0.22-ohm, 2W |
| R7 | - 1-ohm, 2W |
| R9-R14 | - 220-ohm |
| VR1 | - 100-kilo-ohm potentiometer |

*Capacitors:*

| | |
|---|---|
| C1 | - 1µF, 16V electrolytic |
| C2 | - 100nF ceramic disk |
| C3 | - 10nF ceramic disk |
| C4 | - 1nF ceramic disk |
| C5 | - 0.33µF ceramic disk |
| C6 | - 1000µF, 25V electrolytic |

*Miscellaneous:*

| | |
|---|---|
| F1 | - 2A fuse |
| S1 | - 4-way rotary switch |
| CON1-CON6 | - 2-pin connector |
| S2, S3 | - On/off switch |
| B1, B2 | - 12V, 5W bulb |
| M1 | - 12V DC motor |
| | - 14-pin IC base |
| | - 12V, 2A regulated supply |

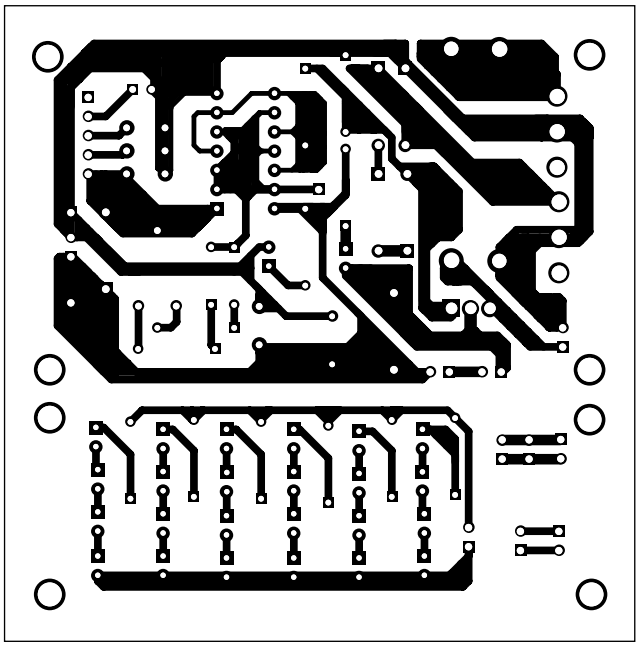

Fig. 2: An actual-size, single-side PCB for the simple manual PWM generator

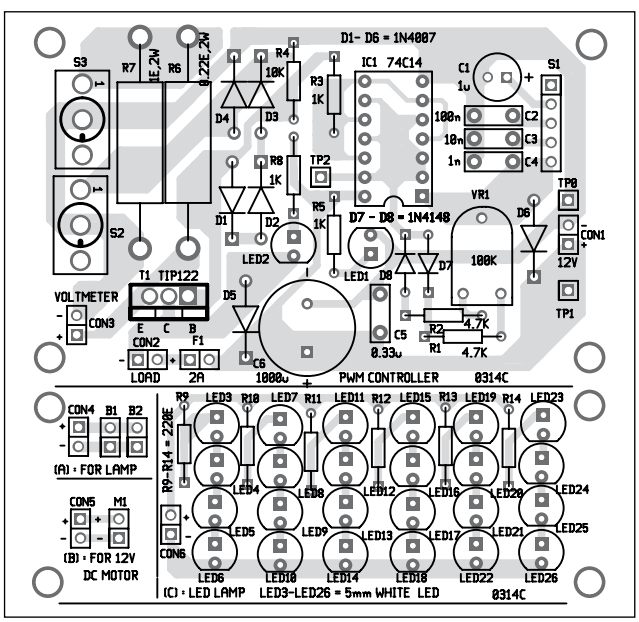


Fig. 3: Component layout for the PCB

T1. If the voltage drop over these diodes is above 3×0.7V = 2.1V with S2 closed or 4×0.7V = 2.8V with S2 open, these diodes limit the base current of T1 and protect it from destruction. If you omit D1-D4 and a short circuit occurs at CON2, fuse F1 will blow and transistor T1 probably will get destroyed. Resistors R6 and R7 and switch S3 determine the maximum current (the threshold) of the current limiting function accomplished by D1-D4.

## Construction and testing

An actual-size, single-side PCB for simple manual PWM generator is shown in Fig. 2 and its component layout in Fig. 3.

After assembling the circuit on PCB, enclose it in a suitable plastic case. Fix all the connectors and switches on PCB and make them accessible from outside the case. CON3 may be used to connect a multimeter to measure the voltage across resistors R6 and R7, if required.

The loads can be mounted on the PCB itself. To connect any load, just connect CON2 to the corresponding load connector such as CON5 for DC motor. The loads are:

1. Load with two lamps that works on 12V. Power is 5W and current is around 400mA

2. Load with DC motor works on 12V and current rating is around 300mA

3. Load with 24 white bright LEDs

To test the circuit for proper functioning, follow test points table and verify all voltage levels accordingly. ●

*The author is a regular contributor to EFY. He was a researcher and assistant professor in Technical University of Sofia (Bulgaria) and an expert lecturer in Kingdom of Morocco. Now he is working as an electronics engineer in the private sector in Bulgaria*

# Locker-Security Alarm

DINESH RAI

Presented here is a simple locker security alarm that can be used to protect a locker from unauthorised access. The circuit is low-cost and forms a fool-proof alarm that receives its control signal from a standard reed switch. The circuit works off a 12V DC power supply.

## Circuit and working

Fig. 1 shows the circuit diagram of the locker-security alarm. The circuit is built around quad NOR gate IC CD4001 (IC1), reed switch RS1 and transistor BC547 (T1). Reed switch RS1, together with a permanent magnet, forms the sensing unit as shown in Fig. 1.

The magnet is fixed on the door of the locker and reed switch RS1 on the door-frame such that when the door closes, both of them come close to each other. Now, when switch S1 is turned on, 12V supply is extended to the circuit. Normally, when the locker is closed, the reed switch is also closed due to the presence of bar magnet, and hence the output of gate N2 of IC1 is in logic low state.

When the locker is opened, reed switch also opens and the output state changes to logic high level, enabling the bistable latch realised using gates N1 and N3. As a result, relay driver transistor T1 activates to drive the alarm. A hooter at CON3 or a buzzer at CON2 can be connected for the audio alarm. A separate power supply in case of hooter needs to be connected at CON4. Push-to-on-type switch S2 is used to reset the bistable circuit.

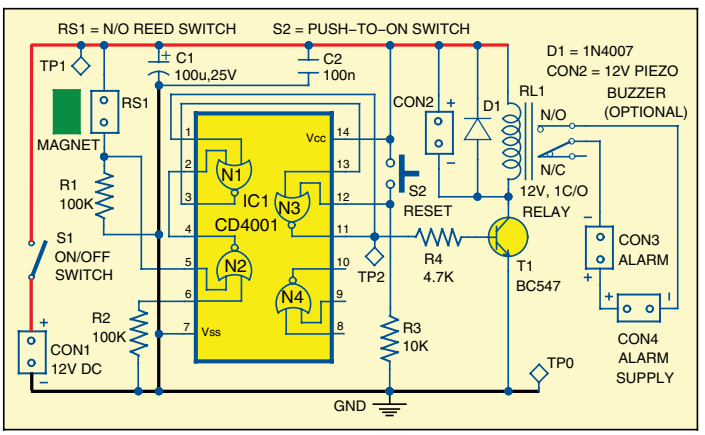


*Fig. 1: Circuit diagram of the locker-security alarm*

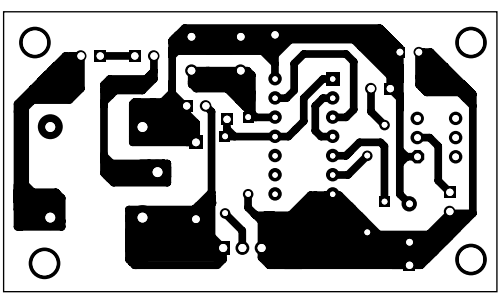

*Fig. 2: An actual-size, single-side PCB of the locker-security alarm*

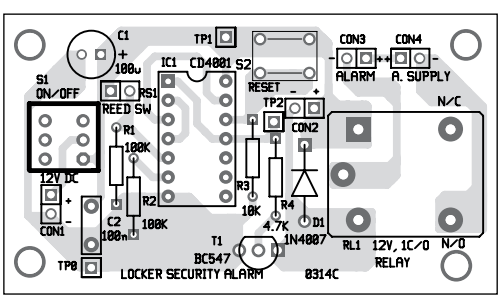


*Fig. 3: Component layout for the PCB*

## Construction and testing

An actual-size, single-side PCB for the locker-security alarm is shown in Fig. 2 and its component layout in Fig. 3.

After assembling the circuit on PCB, enclose it in a suitable plastic case. Fix the magnet on the door and the reed switch on the door-frame. Connect the reed switch through wires to RS1 on the PCB. Connect a buzzer at CON2 or a hooter at CON3. The power supply for the hooter is connected at CON4. Finally, connect the power supply for the circuit at CON1 and the circuit is ready to use. Take care that all the connectors and switches stick out of the plastic case.

To test the circuit for proper functioning, verify various voltage levels as indicated in the test point table. ●

### Test Points

| Test point | Details |
|---|---|
| TP0 | GND |
| TP1 | 12V (when S1 is on) |
| TP2 | High when the locker door is opened |

### PARTS LIST

*Semiconductors:*
IC1 - CD4001 quad NOR gate
D1 - 1N4007 rectifier diode
T1 - BC547 npn transistor

*Resistors (all 1/4-watt, ±5% carbon):*
R1, R2 - 100-kilo-ohm
R3 - 10-kilo-ohm
R4 - 4.7-kilo-ohm

*Capacitors:*
C1 - 100µF, 25V electrolytic
C2 - 100nF ceramic disk

*Miscellaneous:*
S1 - On/off switch
S2 - Push-to-on switch
RS1 - N/O reed switch
CON1-CON4 - 2-pin connector
RL1 - 12V, 1C/O relay
- Permanent magnet
- 14-pin IC base
- 12V battery or 12V, 500mA regulated supply

*The author is an M.Tech from NIT, Raipur (Chhattisgarh) and deeply interested in designing electronics circuits*

# Guiding Visually Challenged Using Raspberry Pi

GURUNATH REDDY M.

Blindness is a state of lacking the visual perception due to physiological or neurological factors. Partial blindness represents the lack of integration in growth of the optic nerve or visual centre of the eye, and total blindness is full absence of the visual light perception. In this project, a simple, cheap and user-friendly smart blind guidance system is designed and implemented to improve the mobility of both blind and visually impaired people in a specific area.

The project includes wearable equipment comprising earphones connected to Raspberry Pi and a hand-stick containing infrared sensors circuit to help the blind person navigate alone safely and avoid any obstacles. The reflected infrared signals from an obstacle are used as inputs to Raspberry PI. Based on the direction of the received signal, Raspberry Pi prompts a message in the earphones to help take suitable action.

| | | | |
|---|---|---|---|
| 3.3V | 1 | 2 | 5V |
| I2C0 SDA | 3 | 4 | DNC |
| I2C0 SCL | 5 | 6 | GROUND |
| GPIO4 | 7 | 8 | UART TXD |
| DNC | 9 | 10 | UART RXD |
| GPIO 17 | 11 | 12 | GPIO 18 |
| GPIO 21 | 13 | 14 | DNC |
| GPIO 22 | 15 | 16 | GPIO 23 |
| DNC | 17 | 18 | GPIO 24 |
| SP10 MOSI | 19 | 20 | DNC |
| SP10 MISO | 21 | 22 | GPIO 25 |
| SP10 SCLK | 23 | 24 | SP10 CE0 N |
| DNC | 25 | 26 | SP10 CE1 N |

*Fig. 1: Pin description of GPIO header*

## Circuit and working

Fig. 1 shows the pin description of a GPIO connector on Raspberry Pi. The GPIO connector has pins with different functions. The device has seven true GPIO pins, I²C interface, SPI interface, serial $T_X/R_X$ pins and PWM pins that can be used to control external hardware.

Fig. 2 shows the circuit diagram of the sensor section. It comprises quad operational amplifier LM324 (IC1), three IR transmitter-receiver pairs and a few easily available components. The sensor section is connected to the GPIO pins of Raspberry Pi as shown in Fig. 2. This section gets the power for operation from Raspberry Pi itself.

The IR transmitter-receiver pairs are mounted on the left, front and right side of the hand stick and they transmit IR signals regularly. The corresponding receiver receives back the signal if it is reflected by some obstacle in that particular direction. The received signal is fed to corresponding operational amplifier of IC1. Output of each operational amplifier is limited to 3.3V by zener diodes. The Raspberry Pi detects the direction from which the signal is received and issues suitable audio message to the earphones to help avoid the obstacle. The accompanied table mentions all the messages. Presets VR1 through VR3 are used to set the reference levels for comparators A1, A4 and A3.

The person who is wearing the earphones gets the suitable commands to take necessary action. One such example is, if there is obstacle in all the directions, the user gets a message 'better to go back' through the earphones connected to the Raspberry Pi.

### Different Situations and Messages Given by the System for the User to Take Necessary Actions

| Levels at pins 11, 12 and 13 of Raspberry Pi | Message generated by the system for necessary actions |
|---|---|
| 000 | You can move in any direction |
| 001 | Move either left or front |
| 010 | Move either left or right |
| 011 | Move left |
| 100 | Move either front or right |
| 101 | Move front |
| 110 | Move right |
| 111 | Better to go back |

## Software

Before you follow the software installations, ensure that your Raspberry Pi is already setup with Raspbian 'wheezy' operating system. You can refer 'Getting Started with Raspberry Pi' published in April 2013 issue to set up the Raspberry Pi. Now all you need is a network connection on Raspberry Pi to

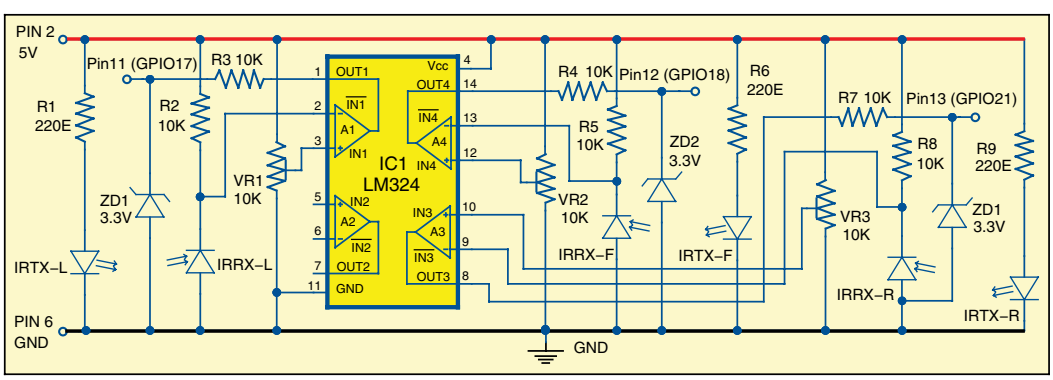


*Fig. 2: Circuit diagram of the sensor section*


*Fig. 3: Install alsa-utils*

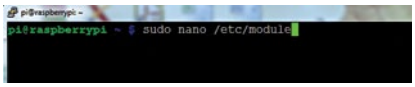


*Fig. 4: Open module file in nano editor*

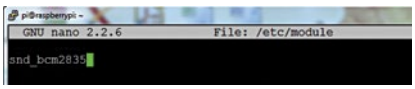


*Fig. 5: Add 'snd_bcm2835' in the file*

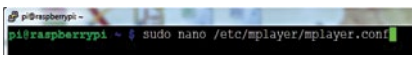


*Fig. 6: Open mplayer configuration file*

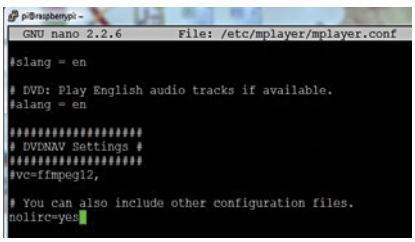


*Fig. 7: Add 'nolirc=yes' to the file*

install all the software. Refer 'Set up Network for Raspberry Pi' published in May 2013 issue for getting the network connection up on your Raspberry Pi. Once done, you can either connect a keyboard and a display to Raspberry Pi and start following the installations using LxTerminal or you can access Raspberry Pi remotely using SSH and execute all the commands directly.

***Festival text-to-speech installation.*** The Festival Speech Synthesis System is a general-purpose multilingual speech synthesis system used here to direct the visually challenged person to take the right path. Festival is designed to support multiple languages, and comes with support for English (British and American pronunciation), Welsh and Spanish. Voice packages exist for several other languages, such as Castilian Spanish, Czech, Finnish, Hindi, Italian, Marathi, Polish, Russian and Telugu.

**EFY Note**

The source code of this project is included in this month's EFY DVD and is also available for free download on source.efymag.com website.

First update and upgrade the Raspberry Pi related software using the commands below and reboot your Raspberry Pi for a fresh look:

```
$ sudo apt-get update
$ sudo apt-get upgrade
```

To install sound on Raspberry Pi, you need to install 'alsa' sound utilities using the command below. Refer Fig. 3.

```
$ sudo apt-get install alsa-utils
```

Now edit the module file at '/etc/modules' using nano editor. For that, run the command below to open the file in nano editor and add 'snd_bcm2835.' Refer Fig. 4 and Fig. 5.

```
$ sudo nano /etc/module
```

If 'snd_bcm2835' line is already present, leave the file as it is. Once done, save the file by 'CTRL+O' and exit by 'CTRL+X.'

Now install the mplayer audio/movie player by command mentioned below:

```
$ sudo apt-get install mplayer
```

To sort out the mplayer error message, edit file '/etc/mplayer/mplayer.conf' using nano editor and add 'nolirc=yes.' Refer Fig. 6 and Fig. 7.

```
$ sudo nano /etc/mplayer/mplayer.conf
```

Once you have completed all the steps mentioned above, you can install Festival text-to-speech using the command below:

```
$ sudo apt-get install festival
```

You can try out Festival installation using the command below in the terminal and you will hear 'Hello EFY' in the earphones.

```
$ echo "Hello EFY" | festival --tts
```

***Python GPIO module for Raspberry Pi.*** The code is written in Python programming language and compiled using Python in the Raspberry PI. Python comes as a built-in package for the Raspberry Pi and we only need to install the GPIO package modules.

Download the 'RPi.GPIO-0.1.0.tar.gz' from 'http://pypi.python.org/packages/source/R/RPi.GPIO/RPi.GPIO-0.1.0.tar.gz' and extract into a suitable directory using the command:

```
$ tar -zxvf RPi.GPIO-0.1.0.tar.gz
```

Now use 'cd' command to go inside the extracted directory and install the package using:

```
$ sudo python setup.py install
```

Once the package is installed, download the source code in a suitable directory and run it using:

```
$ sudo python filename.py
```

You can also copy the code in nano editor and save it with .py extension. Please note that Python is strictly indented language and the indentation normally change when you paste the code in nano editor. ●

*The author is a student of M.Sc. at IIT, Kharagpur*

Part 2 of 5

# Designing with FPGAs: Interfacing an LCD

VARSHA AGRAWAL

The first part of the series discussed the implementation of I²C controller using an FPGA. The focus in this part is interfacing FPGA with LCD. The basics of LCD operation, hardware interconnection and VHDL code along with its description are presented here.

## LCD operation

Liquid crystals are materials that exhibit properties of both solids and liquids. These can be classified as nematic, smectic and cholesteric. Nematic liquid crystals are generally used in LCD fabrication with the twisted nematic material being the most common. Fig. 1 shows the construction of a twisted nematic LCD display. As we can see from the figure, it comprises a cell of liquid crystal fluid, conductive electrodes, a set of polarisers and a glass casing.

Polarisers are components that polarise light in one plane. On the inner surface of the glass casing, transparent electrodes are placed in the shape of the desired image. The electrode attached to the front glass is referred to as the segment electrode and the one attached to the rear glass is the backplane or the common electrode. The patterns of the backplane and segment electrodes form the numbers, letters, symbols, etc. The liquid crystal is sandwiched between the two electrodes.

An LCD controls the transmission of light by changing the polarisation of the light passing through the liquid crystals with the help of an externally applied voltage. As LCDs do not emit their own light, backlighting is used to enhance the legibility of the display in dark conditions. Backlighting is done using incandescent lamps, LEDs or electro-luminescent lamps.

LCDs have the capability to produce both positive as well as negative images. A positive image, defined as a dark image on a light background, is produced when the pixel that is 'off' is transparent and a pixel that is 'on' is opaque. In these displays, the front and the rear polarisers are perpendicular to each other.

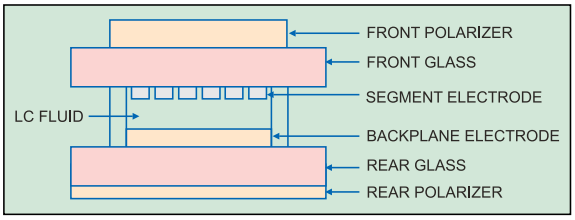


*Fig. 1: Construction of a twisted nematic LCD display*

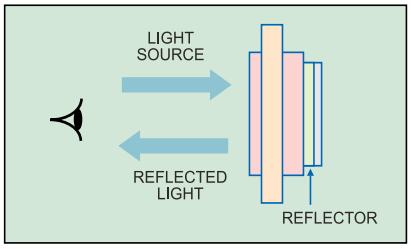


*Fig. 2: Operation of reflective LCD display*

A negative image is a light image on a dark background and is produced when a pixel that is 'off' is opaque and a pixel that is 'on' is transparent. This mode is typically used only when there is a backlight and the ambient lighting conditions are medium to dim. In these displays, the front and the rear polarisers are aligned to each other.

LCDs can be classified as direct drive and multiplex drive displays depending upon the technique used to drive them. Direct drive displays, also known as static drive displays, have an independent driver for each pixel. The drive voltage in this case is a square waveform having two voltage levels, namely, ground and $V_{CC}$. However, as the display size increases, the drive circuitry becomes very complex. Hence, multiplex drive circuits are used for larger displays. Such displays reduce the total number of interconnections between the LCD and the driver. These have more than one backplane and the driver produces amplitude-varying, time-synchronised waveforms for both the segments and backplanes.

LCDs are non-emissive devices, that is, they do not generate light of their own. Depending upon the mode of transmission of light in LCDs, these are classified as reflective, transmissive and transreflective displays.

Reflective LCD displays have a reflector attached to the rear polariser which reflects incoming light evenly back into the display. Fig. 2 shows the principle of operation of reflective LCD displays. Such displays rely on the ambient light to operate and do not work in dark conditions. These produce only positive images. The front and the rear polarisers are perpendicular to each other. Such displays are commonly used in calculators and digital wrist watches.

In transmissive LCD displays, back light is used as the light source. Most of these displays operate in the negative mode, with the text displayed in light colour and the background in a dark colour. Fig. 3 shows the basic construction of a transmissive display. Negative transmissive displays have front and rear polarisers in parallel with each other whereas positive transmissive displays have the front and the rear polarisers perpendicular to each other.

Transmissive displays are good for very low light level conditions. They offer very poor contrast when used under direct sunlight because sunlight

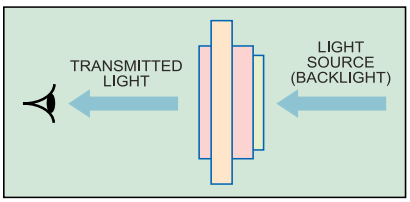


*Fig. 3: Construction of a transmissive display*

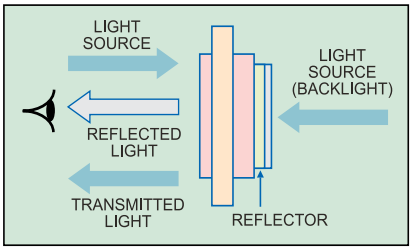


*Fig. 4: Transreflective displays*

swamps out the backlighting. These are generally used in medical devices, electronics test and measuring equipment and in laptops.

Transreflective displays are a combination of reflective and transmissive displays (Fig. 4). A white or silver translucent material is applied to the rear of the display, which reflects some of the ambient light back to the observer. It also allows the backlight to pass through. These are good for use in varying light conditions. However, they offer poorer contrast ratios than reflective displays.

LCD displays can also be classified as passive and active depending on nature of the activation circuit. Passive displays use components that do not supply their own energy to turn on or turn off the desired pixels. These have a set of multiplexed transparent electrodes arranged in a row/column pattern. To address a pixel, the column containing the pixel is sent a charge and the corresponding row is connected to ground. Passive displays can have either direct drive or multiplexed drive circuitry.

However, for larger displays it is not possible and economical to have separate connections for each segment. Also, as the number of multiplexed lines increase, the contrast ratio decreases due to the cross-talk phenomenon wherein a voltage applied to the desired pixel causes the liquid crystal molecules in the adjacent pixels to partially untwist.

These inherent problems of passive displays are removed in active displays. Active displays use an active device such as a transistor or a diode for each pixel which acts like a switch that precisely controls the voltage that each pixel receives. Active displays are further classified as thin film transistor (TFT) displays and thin film diode (TFD) displays depending upon whether the active device used is a transistor or a diode.

In both these devices, a common electrode is placed above the liquid crystal matrix. Below the liquid crystal is a conductive grid connected to each pixel through a TFT or a TFD. Gate of each TFT is connected to the row electrode, the drain to the column electrode and the source to the liquid crystal. The display is activated by applying voltage to each row electrode line by line. A major advantage of active displays is that nearly all effects of cross-talk are eliminated.

As LCD displays are not active sources of light, these offer such advantages as very low power consumption, low-operating voltages and good flexibility. However, their response time is too slow for many applications. They are also temperature sensitive and offer limited viewing angles.

## LCD signals

LCD displays are available typically in 8×2, 16×2, 20×2 or 20×4 formats; 20×2 means two lines of 20 characters each. These displays come with an LCD controller that drives the display. Fig. 5 shows the interface of LCD display with an FPGA.

There are three control lines namely EN (Enable), RS (Register Select) and R/$\overline{W}$ (Read/Write). EN line is used to instruct the LCD that the master controller is sending data. It is used by the LCD to latch information present on the data pins. When data is applied to the data pins, a high-to-low pulse must be applied to the EN pin so that the LCD latches the data present at the data pins. The minimum Enable signal pulse width required is 450ns.

The RS pin is used to select the register to which the data has to be stored to. LCD has two registers to store the data depending upon its nature, namely, the instruction command code register and the data register. When the RS pin is high, data is sent to the data register. The data is a text data to be displayed on the LCD. When RS pin is low, the data is treated as command or instruction to the LCD module and is stored in the instruction command code register. When R/$\overline{W}$ pin is low, the instruction on the data bus is written on the LCD. When R/$\overline{W}$ pin is high, it means that the data is being read from the LCD. The different commands to the LCD instruction register are shown in Table I.

The 8-bit data bus is used to send information to the LCD or read the contents of the LCD's internal registers. Sometimes, 4-bit bus is also used to send information. To display letters and numbers, we send their ASCII codes.

The software routine initialises the LCD first by setting the width of the data bus, selecting the character, font etc, clearing the LCD, turning on the LCD module and the cursor, setting the cursor position and so on. Then the data to be displayed is sent on the data lines. The different steps for driving the LCD are described in the following paragraphs.

Before using the LCD for display it has to be initialised (see Fig. 6). The LCD can be initialised either by using the internal reset circuit or by sending a set of commands to the LCD. The choice is of the designer, but the second method is more popular. The internal reset circuit is highly dependent on the power supply.

## VHDL code listing

The process flow followed to drive the LCD is as follows:

1. Write 0×38, wait 4.2 milliseconds
2. Write 0×38, wait 4.2 milliseconds
3. Write 0×38, wait 4.2 milliseconds
4. Write 0×38, wait 4.2 milliseconds (function set, two-line display and 5×8 dot character font)
5. Write 0×08, wait 4.2 milliseconds (display off, cursor off)
6. Write 0×01, wait 4.2 milliseconds (display clear)
7. Write 0×0C, wait 4.2 milliseconds (display on, cursor off)

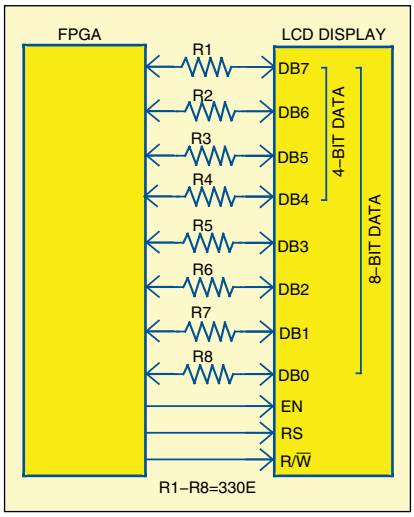


*Fig. 5: Interfacing of LCD display with an FPGA*

**TABLE I**
**Different Commands to the LCD Instruction Register**

| Code (Hex) | Command to LCD instruction register |
|---|---|
| 1 | Clear display screen |
| 2 | Return Home |
| 4 | Shift cursor to left |
| 6 | Shift cursor to right |
| 5 | Shift display right |
| 7 | Shift display left |
| 8 | Display off, cursor off |
| A | Display off, cursor on |
| C | Display on, cursor off |
| E | Display on, cursor blinking |
| 10 | Shift cursor position to left |
| 14 | Shift cursor position to right |
| 18 | Shift the entire display to left |
| 1C | Shift the entire display to right |
| 80 | Force cursor to beginning of first line |
| C0 | Force cursor to beginning of second line |
| 38 | 2 lines and 5×7 matrix |

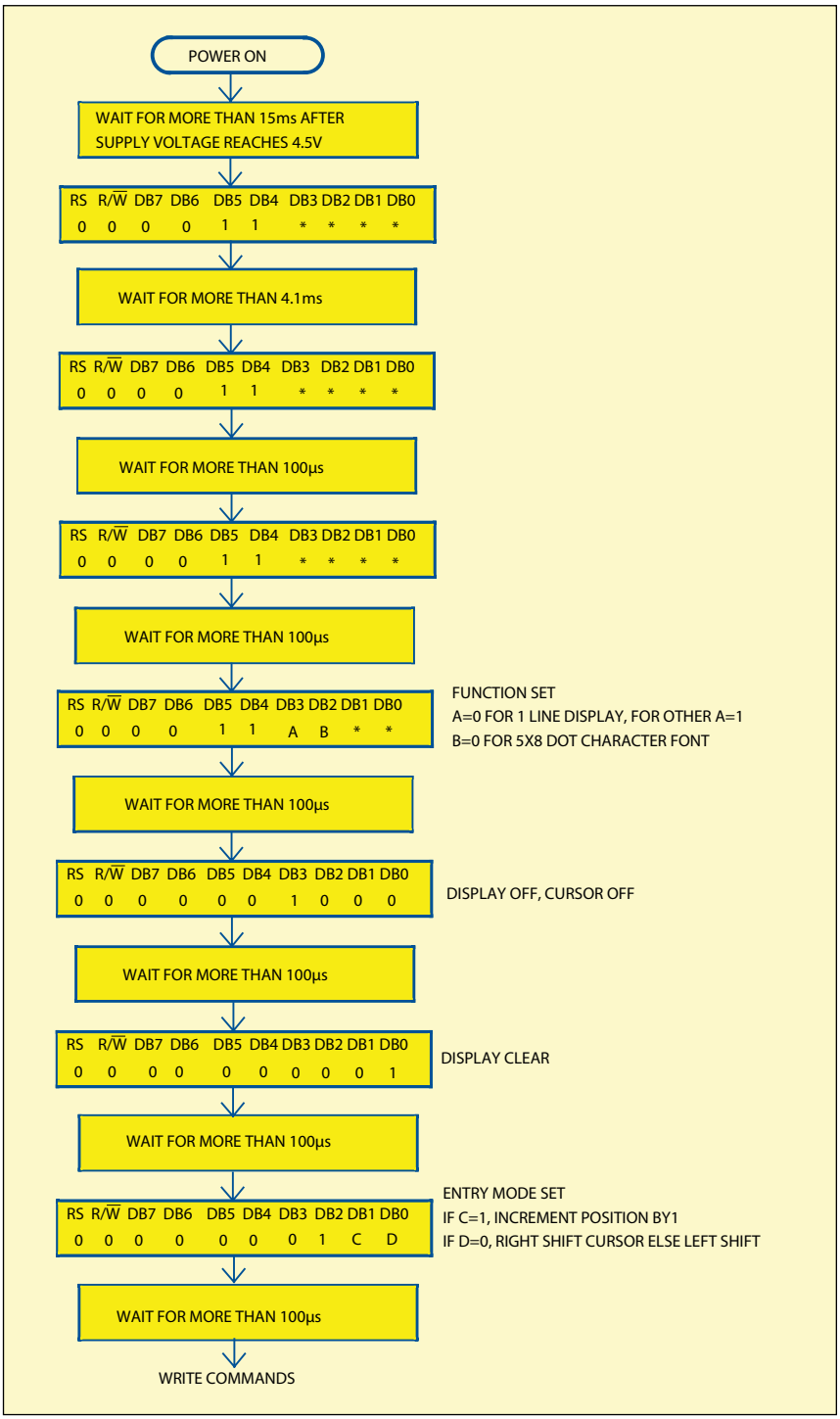


*Fig. 6: Flowchart for LCD initialisation*

8. Write 0×06, wait for 4.2 milliseconds (shift cursor to right)
9. Write ASCII 'W', wait 4.2 milliseconds
10. Write ASCII 'E', wait 4.2 milliseconds
11. Write ASCII 'L', wait 4.2 milliseconds
12. Write ASCII 'C', wait 4.2 milliseconds
13. Write ASCII 'O', wait 4.2 milliseconds
14. Write ASCII 'M', wait 4.2 milliseconds
15. Write ASCII 'E', wait 4.2 milliseconds

As shown in the flowchart in Fig. 6, all steps do not require a few milliseconds for execution. However, to simplify the code, the time for all the steps is kept uniform. In case this is found unsuitable for the design, the designer can modify the timings.

Instead of using delays, one can check the status of the busy flag to see if the LCD is ready to receive information. The busy flag is the MSB of the data bus and can be read when R/$\overline{W}$ = 1, RS = 0 and low-to-high pulse is applied to the EN pin. If the busy flag is high, the LCD is busy taking care of the internal operations and will not accept any new information. When the busy flag is low, the LCD is ready to accept new information.

The VHDL code (LCD_fpga.vhd) for implementing the LCD controller is included in this month's EFY DVD. The code writes 'WELCOME' on the LCD display. The LCD display used here is 16×2. One can use any display and change the initialisation commands accordingly.

## VHDL code description

The code begins with the standard library to be included. The ENTITY section defines the interface between the LCD module and the outside world. It includes all the input and the output connections including the 50MHz clock (Clock) and reset (Reset) as inputs, LCD register select (LCD_RS) and LCD enable (LCD_E) as outputs, LCD read/write (LCD_RW) as buffer and 8-bit data bus (DATA_BUS) as inout. DATA_BUS is defined as inout so that it is capable for both input and output operations.

The architecture section defines the two operations of the LCD module for generating the LCD clock and implementing the FSM. The different signals defined in the architecture include state and next_command of state_type, DATA_BUS_VALUE which is an 8-bit STD_LOGIC_VECTOR, COUNT_CLK_LCD which is a 28-bit STD_LOGIC_VECTOR and CLK_LCD which is a STD_LOGIC signal. The value of the signal DATA_BUS_VALUE is ported to port DATA_BUS when LCD_RW is at logic '0', otherwise the port DATA_BUS remains in the high-impedance state.

The state_type is a signal type that defines different states of the LCD, namely Hold, Display_ON, Mode_SET, Write_CHAR1, Write_CHAR2, Write_CHAR3, Write_CHAR4, Write_CHAR5, Write_CHAR6, Write_CHAR7, Return_HOME, Toggle_E, Reset1, Reset2, Reset3, Display_OFF and Display_CLR. The state and next_command are two signals of state_type.

As mentioned before, the first operation generates the slow clock for the LCD. It uses the 21st bit of the COUNT_CLK_LCD signal; the clock signal for the LCD is named as CLK_LCD.

The second operation is the FSM that drives the LCD. If the Reset pin is in high state, the LCD is initialised by sending 0×38 in hex on the data bus. RW and RS signals are set to '0' and the Enable pin is set to '1.' The current state is defined as Reset1 and the next_command state as Reset2. When the Reset pin is in low state, the FSM of driving the LCD is implemented. The different states of the FSM are Reset1, Reset2, Reset3, Display_OFF, Display_CLR, Display_ON, Mode_SET, Write_CHAR1, Write_CHAR2, Write_CHAR3, Write_CHAR4, Write_CHAR5, Write_CHAR6, Write_CHAR7 and Return_HOME. Toggle_E and Hold are two sub-states.

For LCD initialisation, the command '0×38' (hex) is sent to LCD in three states: Reset1, Reset2 and Reset3. It may be mentioned here that the command is dependent on the size of the LCD being used. The '0×38' is used to initialise a 16×2 LCD. The RS and RW signals are set at logic '0.' Enable signal is set at logic '1.' The FSM is directed to sub-state Toggle_E where the Enable signal is made to go to logic '0' and the FSM is directed to the Hold sub-state. The Hold sub-state directs the FSM to the next state next_command as set in the main states earlier. Remember that the data on the data bus is latched by the LCD on the high-to-low transition of the Enable signal.

After the Reset3 state, the FSM goes to the Display_OFF state. The data bus sends command '0×08' (hex) to the LCD which is for display off and cursor off. The program loop then goes to the Display_CLR state. The state clears any text on the display. To do this command '0×01' (hex) is sent to the data bus. The next state is the Display_ON state (display on and cursor off) which is executed by sending command '0×0C' (hex) on the data bus. Next state is the Mode_SET state that sets the LCD such that the cursor shifts to right after each character is displayed. This is done by setting data bus to '0×06' (hex).

The next seven states Write_CHAR1, Write_CHAR2, Write_CHAR3, Write_CHAR4, Write_CHAR5, Write_CHAR6 and Write_CHAR7 display seven alphabets 'W', 'E', 'L', 'C', 'O', 'M' and 'E' on to the display. The next state is RETURN_HOME that sets the address of the next command to be written and then sends the FSM to the Reset1 state. 'WELCOME' is again written on the LCD and the process is repeated again.

It may be mentioned here that the default position of the cursor is the beginning of the first line. If any other position needs to be used to display the text, a command needs to be sent to force the cursor to the desired position. Table II gives the addresses of different positions of the LCD.

**TABLE II**
**Addresses for Different LCD Sizes**

| LCD type | Address |
|---|---|
| 16×2 | 80 81 82 83 84……..8F |
| | C0 C1 C2 C3 C4……..CF |
| 20×1 | 80 81 82 83 84……..93 |
| 20×2 | 80 81 82 83 84……..93 |
| | C0 C1 C2 C3 C4……..D3 |
| 20×4 | 80 81 82 83 84……..8F |
| | C0 C1 C2 C3 C4……..CF |
| | 94 95 96 97 98……..A7 |
| | D4 D5 D6 D7 D8……..E7 |
| 40×2 | 80 81 82 83 84……..A7 |
| | C0 C1 C2 C3 C4……..E7 |

**EFY Note**

The source code of this project is included in this month's EFY DVD and is also available for free download on source.efymag.com website.

## Conclusion

This part described the LCD controller implementation using an FPGA. The next part will cover details on how to establish an RS-232 communication link using an FPGA.

*To be continued...*

*Varsha Agrawal is a scientist at Laser Science and Technology Center (LASTEC), a premier DRDO lab working in the field of laser-based defence systems. She has more than 13 years of R&D experience in the design and development of a variety of systems for defence-related applications. She has authored two books and published more than 20 research papers and technical articles*

## India will now incubate electronics start-ups

In a bid to boost the electronics ecosystem in the country, the Indian government has come up with the idea of setting up four hubs to incubate electronics start-ups. These hubs will be created across the country and will help start-ups that specialise in electronics. Recently, the government had also approved the establishment of two semiconductor fabrication units.

The Indian government is working at growing the electronic system design and manufacturing (ESDM) sector in the country by facilitating local manufacturing and putting a restraint on the import of electronics goods. Taking a step in this direction, it had earlier announced the Electronics Policy 2012 along with a two billion dollar electronics development fund.

## In Focus

### AIREA West elects new managing committee members

The All India Radio & Electronic Association (AIREA) West has elected its new managing committee members. While Javerchand Gala, director of Vegakit (India) Pvt Ltd, will be the new president, Nayan Parekh takes over as vice president and Mitesh Mody has been elected the new secretary for the period 2013-15. The association, which celebrated its platinum jubilee last year, represents all sections of the electronics trade and industry.

### HCL Infosystems announces the appointment of two new directors

HCL Infosystems has announced the appointment of two new independent non-executive directors, Sangeeta Talwar and Kaushik Dutta on its board.

## Home-grown solar products to boost Indian solar power industry

As per report titled 'Indian Solar Power Industry: Outlook to 2017,' the cumulative solar PV-installed capacity in India is projected to grow at a CAGR of 31.5 per cent during 2012-16. The growing need for energy, and shortages in conventional power generation sources, has triggered the demand for solar photovoltaic panels and other such products. As a result, manufacturers are expanding their existing capacities to meet the rising demand in the country.

The manufacturers have also garnered support from the government, which has initiated subsidy schemes for them. This would help domestic panel producers to scale up operations and improve their cost-competitiveness.

*Solar panels*

## Karnataka gets approval for electronics cluster

The electronics industry in the state of Karnataka has got a big boost with the in-principle approval of a ₹ 850 million electronics cluster. The cluster has been approved by the Department of Electronics and Information Technology (DeitY).

The state will now set up its first ESDM brownfield cluster development project in the Electronic City near Bengaluru, informed S.R. Patil, state minister for IT, Biotechnology and Science and Technology. The brownfield cluster aims to accelerate the growth of the ESDM industry in Karnataka, and will be set up at an estimated cost of ₹ 851.5 million.

## Interim budget presented by the finance minister

Contrary to expectations, the finance minister has made changes in the Interim Budget in the excise duty applicable to some commodities.

The excise duty on all goods falling under Chapters 84 and 85 of the Schedule to the Central Excise Duty has been reduced to 10 per cent from 12 per cent for a period up to June end this year. This is designed to stimulate growth in capital goods and consumer non-durables.

Even though finance minister, P. Chidambaram, made an attempt to spur local manufacturing of 'Made in India' cell phones by cutting excise duty, low-end models will cost a tad more as there is no supporting manufacturing ecosystem in the country. To encourage domestic production of mobile handsets (which has declined) and reduce the dependence on imports (which have

increased), finance minister has proposed restructuring the excise duties for all categories of mobile handsets. The rates will be six per cent with CENVAT credit or one per cent without CENVAT credit.

## India invites Japanese electronics industry to establish semiconductor fabs in India

In a bid to attract investment in electronics industry, India has invited Japanese industry to invest in the country and benefit from the support being offered by the government. Anand Sharma, commerce and industry minister, spoke to a team of top Japanese industrialists headed by Keidanren (Japanese Business Federation) Chairman Hiromasa Yonekura.

Sharma said, "Government of India has decided to offer a package of incentives to attract domestic and global investments into Electronic System Design & Manufacturing (ESDM) sector within Electronic Manufacturing Clusters (EMCs) Scheme. In addition, the government has recently approved the proposal for setting up of two semiconductor wafer fabrications (FAB) manufacturing facilities in the country."

He has invited the Japanese companies to invest in India and avail the subsidies, and other support, that the Indian government offers, for establishing FAB facilities in India.

## No land available for semiconductor project in Gujarat

Even as the Indian government earlier gave a nod for setting up of an electronic chip manufacturing plant at Prantij, the Gujarat state government has now revealed that there is simply no land available for the ambitious project. As such, the state government may find it difficult to allot land for the ₹ 290,000 million chip plant.

"Some 500 acres of land is available at Vaghpur, but it is meant for a proposed central university. We have no application from any industry to

## Calendar of Forthcoming Electronics Fairs/Exhibitions/Seminars/Events

| Name, Date and Venue | Topics to be covered | Contact address for details |
|---|---|---|
| **EFY Awards 2014**<br>March 14, 2014<br>Le Meridien Hotel<br>Bengaluru | Awards to recognise brands, organisations and individuals that are leaders in the Indian electronics industry | Arun Singh, Electronics For You<br>D-87/1, Okhla Industrial Area, Phase 1<br>New Delhi 110020; Fax: (011) 26817563;<br>Phone: 26810601/2/3; E-mail: efyenq@efyindia.com<br>Web: www.efyawards.com |
| **Electronica Productonica China 2014**<br>March 18-20, 2014<br>Shanghai New International Expo Centre, China | Displays cutting-edge technologies in cable processing, dispensing, EMS, materials, SMT, coil winding, ESD, test and measurement and automation and component manufacturing | MMI (Shanghai) Co., Ltd<br>11th floor, GC Tower, 1088 Yuanshen Road,<br>Pudong New Area, Shanghai 200122<br>Phone: +86 21 2020 5500<br>Fax: +86 21 2020 5688<br>E-mail: epc@mmi-shanghai.com |
| **IPC Apex**<br>March 25-27, 2014<br>Mandalay Bay Resort and Convention Center<br>Las Vegas, Nevada | Showcases advanced and emerging technologies in printed board design and manufacturing | Maria Labriola, CEM manager, Trade Show Sales<br>Phone: +1 847-597-2866<br>E-mail: MariaLabriola@ipc.org |
| **International Conference on Energy Efficient LED Lighting and Solar PhotoVoltaic Systems**<br>March 27-29, 2014<br>Indian Institute of Technology, Kanpur | An exhibition of LED lighting and solar photovoltaic products where manufacturers and vendors will display their products | Dr R.S Anand - Principal Research Engineer,<br>Department of Electrical Engineering,<br>Indian Institute of Technology, Kanpur UP 208016,<br>India, Phone: +91-512-2597102(O), 2597832 (Lab)<br>2598772 (R), 9935602048; E-mail: rsanand@iitk.ac.in |
| **Korea Sourcing Fair: Electronics & Components Asia World-Expo Hong Kong**<br>April 12-15, 2014<br>Global Sources | An exclusive fair featuring telecommunication products, in-car electronics, computer peripherals, electronic components and consumer electronics and accessories | Media Data Systems Pte. Ltd.<br>Raffles City P.O. Box 0203<br>Singapore 911707; Phone: (65) 6547-2800<br>Fax: (65) 6547-2888 |
| **NEPCON China 2014**<br>April 23-25, 2014<br>World EXPO Exhibition & Convention Center, Shanghai | Sourcing platform in Asia featuring all major brands in the electronics manufacturing world | Tim Wang, Reed Exhibitions Shanghai Branch<br>Fax: +86 21 2231 7181<br>Phone: +86 21 2231 7016<br>E-mail: tim.wang@reedexpo.com.cn |
| **Japan IT Week**<br>May 14-16, 2014<br>Tokyo Big Sight, Japan | A business point for both IT solution providers and IT system managers | Electronics and Computer Software Export Promotion Council, New Delhi<br>Phone: + 91-11-47480000; E-mail: vgupta@escindia.com<br>csrawat@escindia.com, Web: www.escindia.in |
| **IPC APEX India**<br>May 19-22, 2014<br>KTPO, Bangalore | Covers latest innovations in the areas of printed board design and manufacturing and electronics assembly and test | IPC Technology Consulting Pvt Ltd, # 238/34,<br>1st floor 32nd Cross, 7th Block, Jayanagar,<br>Bengaluru 560070; Phone: +91 (0) 80 2653 2211,<br>Fax: +91 (0) 80 2653 2212<br>E-mail: IPCAPEXIndia@ipc.org<br>Web: www.ipcapexindia.in |
| **The Indian Electrical & Electronics Fair**<br>May 30, 2014 to June 1, 2014<br>Sri Lanka Exhibition & Convention Centre, Colombo | Showcases new technology and products as well as services in electronics such as manufacturing and design of electronics and their supplements | Pico Sri Lanka, No. 12<br>D.R. Wijewardene Mawatha<br>Colombo 10, Sri Lanka<br>Phone: +94 11 2343239-40, Mob: +94 779 867272<br>E-mail: kaushik.pico@gmail.com<br>Web: www.pico.lk,www.pico.com |
| **IPCA-EFY Expo 2014**<br>August 6-8, 2014<br>Auto Cluster Exhibition Centre<br>Pune | Provides opportunities for all OEM manufacturers, LED, solar, automobile, medical, defence and R&D material suppliers and end-users to interact with each other | Indian Printed Circuit Association<br>#2711, 2nd Main, HAL 3rd Stage<br>New Thippasandra, Bengaluru 560075, Karnataka<br>Phone: (080) 25210109, 25210309<br>E-mail: ipca@ipcaindia.org |
| **NEPCON South China 2014**<br>August 26-28, 2014<br>Shenzhen Convention & Exhibition Center, China | Sourcing platforms for South China's electronics manufacturing industry | Tim Wang<br>Phone: +86-21-2231-7016<br>E-mail: tim.wang@reedexpo.com.cn<br>Web: http://www.nepconchina.com/ehome/ |
| **Electronica India 2014 and Productronica India 2014**<br>September 23-25, 2014<br>BIEC, Bengaluru | Covers the whole spectrum of the electronics industry from electronics production to electronic components | Kavita Chhatani, Project Manager, MMI India Pvt Ltd<br>Phone: +91 9819418496; Fax: +91 22 4255 4719<br>E-mail: kavita.chhatani@mmi-india.in<br>Web: www.electronica-productronica-india.com |
| **OSI Days 2014**<br>November 7-8, 2014<br>NIMHANS Convention Center<br>Bengaluru | Open Source conference in Asia that aims to nurture and promote the open source ecosystem in the sub-continent | Atul Goel, Electronics For You<br>D-87/1, Okhla Industrial Area, Phase 1<br>New Delhi 110020, Phone: +91 0880 009 4211<br>E-mail: atul.goel@efyindia.com |
| **Electronica Munich, 2014**<br>November 11-14, 2014<br>Munich, Germany | Electronic components, systems and applications | Fax: +49 (0)89 9499720729<br>Phone: +49 (0)89 94920720<br>E-mail: www.messe-muenchen.de |

*Look up under 'Events' section in www.electronicsforu.com for a comprehensive list*

***Since this information is subject to change, all those interested are advised to ascertain the details from the organisers before making any commitment.***

## Snippets

### BIS to establish its lab in Odisha

The State IT Board of Odisha has given its nod for setting up a testing lab for Bureau of Indian Standards (BIS). To develop this lab, Department of Electronics and Information Technology (DEITY) will be responsible for funding.

### Saxon Global acquires Bangalore-based mobility solutions specialist 'Wit Innovation'

Saxon Global has acquired Wit Innovation, a Bangalore-based high-growth mobility and solutions specialist. Wit Innovation has a world-class delivery centre in Bangalore with a resource base of talented and skilled mobility engineers.

be set up at Prantij, either. Even if an industry has to purchase private land, it has to approach us with the proposal. But that has not happened so far," a senior revenue official was quoted by *Business Line* as saying. Interestingly, the state government had earlier said it would allot 1000 acres of land for the ambitious project.

## 3D printing market and 3D printer industry growth forecast

Global 3D printing market demand is projected to rise more than 20 per cent per year to 5 billion dollars in 2017 as per the research report World 3D Printing to 2017. Some of the fastest growth will be seen in the medical and dental market, with especially good opportunities expected in dental applications such as braces, prostheses, crowns, bridges, dental aligners and models for dental restoration procedures.

Other leading markets for 3D printing products include consumer products (for example, jewelry, toys, fashion and consumer electronics), automotive and aerospace, with the latter expected to see above-average growth.

Developing economies such as China and India provide tremendous growth opportunities for the 3D printing manufacturing technologies, majorly due to the rise in lifestyle and general income levels.


*CubeX Duo 3D printer*

## Dr Farooq Abdullah launches Kwality Photonics' uniLEDTM

Kwality Photonics, an LEDs manufacturer, launched uniLEDTM—a range of premier LED automotive fitments—through the hands of Dr Farooq Abdullah, union minister of MNRE. Dr Abdullah emphasised the need for rapid adoption of LEDs in lighting applications to reduce load on the conventional power systems.

Dr Abdullah lauded Kwality's initiative into automotive segment which brought into focus the 30 years of Kwality's R&D expertise in shaping the first universal replaceable LED bulb at the cost of a good-quality filament bulb. The occasion was graced by fraternities from both the electronics and automobile industry, including DSTA and Radiant Enterprises, Kwality's strategic marketing partner for uniLED.


*uniLED launch by Dr Farooq Abdullah*

## Lenovo to acquire Motorola Mobility from Google

Lenovo and Google have entered into a definitive agreement under which Lenovo plans to acquire the Motorola Mobility smartphone business. With a strong PC business and a fast-growing smartphone business, this agreement will significantly strengthen Lenovo's position in the smartphone market. In addition, Lenovo will gain a strong market presence in North America and Latin America, as well as a foothold in Western Europe, to complement its strong, fast-growing smartphone business in emerging markets around the world.

The purchase price is approximately 2.91 billion dollars (subject to certain adjustments), including 1.41 billion dollars paid at close, comprising 660 million dollars in cash and 750 million dollars in Lenovo ordinary shares (subject to a sharecap/floor). The remaining 1.5 billion dollars will be paid in the form of a three-year promissory note.

# NEW PRODUCTS

RECENTLY INTRODUCED IN INDIA, FROM NEAR AND FAR

## TOOLS & EQUIPMENT

### Automatic liquid level controller

RS Electronics offers electronic liquid level controller for automating pump-sets. It is suitable for conductive and non-conductive liquids. Whenever water level in the overhead tank falls below the set low level, the device operates the pump-set and when the water level rises to the set high level, it stops the pump-set.

The controller is also useful for underground tank (reservoir) and avoids overflow of water, dry running, burning against low voltages and single phasing. It saves electricity and is available for single-phase as well as three-phase motor pump-sets. It is suitable for domestic use, hotels, bungalows and manufacturing units. Level controllers other than for water application are also available.

*RS Electronics, Chennai*
*Phone: (044) 24780315*
*E-mail: rselectronics75@ymail.com*

### Soldering, de-soldering and rework stations

Srinivasa Electronics has launched its range of soldering stations including Pluto 555 and Pluto 937 models and de-soldering station Pluto 666. These


include a control unit, soldering iron handle, cleaning sponge, stand and imported alumina ceramic heater.

Another model is Pluto 777, which is both a soldering and de-soldering station and also includes a combined stand. They are offering Pluto 888 MC SMD also, which is a rework station.

*Srinivasa Electronics, Hyderabad*
*Phone: + 91-9618231000*
*E-mail: krr_soldering@rediffmail.com*
*Web: www.plutostations.com*

## LEDs & LED LIGHTING

### Human-centric circadian PowerLED lighting

Binay has developed kelvin-changing human-centric circadian PowerLED light fittings, which have colour temperature changing properties. The colour temperature of the light emitted by these fittings can be manually changed as desired, or set to change

according to a pre-set program. These lights affect the human body clock positively, encouraging the release of appropriate hormones depending on the time of the day (thus leading to increased alertness and productivity during daytime and improved mental and physical relaxation in the evening).

The PowerLED lights are available in three models, say, Binay VarioWhite PowerLED lights, offering continuously variable colour changing from warm white (2700°K) to cool white (6500°K) and Binay DuoWhite and TrioWhite PowerLED lights offering two-step (2700°K and 6500°K) or three-step (2700°K, 4000°K and 6500°K) colour temperature changing facility, respectively. These lights also offer additional advantages of low wattage (10W-15W) and long life of more than 50,000 hours.

*Binay Opto Electronics Pvt Ltd, Kolkata*
*Phone: +91-3322102039*
*E-mail: info@binayLED.com*
*Web: www.binayLED.com*

### LED tubelights and bulbs

GSR Infocom has recently launched LED tubelights and bulbs. Tubelights are T5 and T8 in 18W with isolated

power supply. High-wattage lamps include bulbs of 12W, 15W, 18W, 21W and 24W. They save 50-70 per cent energy, have a high efficiency heat protection system and are driven by a constant-current power supply with input AC of 90V-265V. Other features are an instant start, no flickering, no humming, green environment protection and no RF interference.

The company claims that its products have the highest lumens amongst other similar products available in the market.

*GSR Infocom Pvt Ltd, New Delhi*
*Phone: (011) 45024300*
*E-mail: info@gsrinfocom.com*
*Web: www.indiamart.com/gsrinfocom/*

### High-quality retrofit LED bulbs

Finolex Cables has launched FinoLED—a premium and high-quality variety of LED lighting. The FinoLED product range is intended to satisfy the demand and requirement

of quality lighting in the industrial, commercial and architectural markets such as hotels, restaurants, offices and municipalities, amongst others. Since comfortable and pleasant lighting is a must for certain industries, the LED lights will be an ideal replacement for normal GLS lamps, CFL bulbs and HID lamps.

The range includes retrofit bulb-shaped LED in 0.5W Deco in five colours and specifications of 3W, 5W, 7W, 10W, 12W and 14W, indoor lighting including LED flat-panel downlighter, LED slim tubelight fixture in 4W, 10W and 18W, street light varying between 20W and 210W, industrial high bay fixtures varying from 45W-210W.

*Finolex Cables Limited, New Delhi*
*Phone: +91-9810009060, 9819010115*
*Web: www.finolex.com*

## LED strips and spot lights

NTL Lemnis has launched a wide range of LED lighting products un-

der the 'Pharox' brand, especially for the hospitality sector. NTL Lemnis has created four special categories of products for the hospitality industry—Pharox retrofit LED lamps, downlights, LED strip and spot lights. The Pharox range from NTL Lemnis is low-maintenance, offers excellent value for money proposition and conserves energy as well.

*NTL Lemnis India Pvt Ltd, Bangalore*
*E-mail: dk.shaik@ntl-lemnis.com*
*Phone: +91-9743750731*
*Web: www.ntl-lemnis.com*

## DALI interface converter with PWM and DC output

GlacialLight, a division of the Taiwanese technology manufacturer GlacialTech Inc., has introduced the GL-DA02 DALI interface converter to its product line up. As an open standard, DALI is internally recognised as the premier new lighting control interface and is cross-compatible across lighting components from different manufacturers.

GlacialLight's DALI interface convertor is IEC62386 (102, 206) compliant. Taking a digital DALI signal, it can output either PWM, 0-10V DC or 1-10V DC signals and is suitable for controlling 3-in-1 (DC/PWM/resistor) LED drivers. Dimming can be set on a linear or logarithmic curve. With a built-in relay, devices down the line can be turned off completely, giving complete lighting control and reducing energy costs.

*GlacialTech Inc., Delhi*
*E-mail: sales@GlacialLight.com*
*Web: www.GlacialLight.com*

# TEST & MEASUREMENT

## Handheld cable and antenna analyser

Anritsu Company has introduced the Microwave Site Master S820E, which is the world's first handheld cable and antenna analyser with frequency coverage up to 40GHz. In addition


to providing the widest frequency coverage of 1MHz to 40GHz, the Site Master S820E offers field technicians, engineers and wireless network installers a dynamic range, directivity and durability so they can conduct highly accurate measurements during the installation, maintenance and trouble-shooting of microwave communication systems. Additionally, the Site Master S820E features vector network analyser (VNA) measurement functionality.

*Anritsu Corporation, Bengaluru*
*Phone: (080) 40581300*
*Web: www.anritsu.com*

## Arbitrary waveform/function generator

Scientific Mes Technik introduces DG1000Z series arbitrary waveform generators, which can be used for a variety of applications because of their ability to generate highly customised waveforms from on-board memory. DG1000Z series function/arbitrary waveform generator is a multi-func-

tional generator, which combines many functions in one such as being a function generator, arbitrary waveform generator, noise generator, pulse generator, harmonics generator, analogue/digital modulator and counter. As a multifunction, high-performance and portable generator, it can be of use in education, industry, R&D, production and testing.

Its main features include innovative signal fidelity (SiFi), say, it can generate arbitrary waveform point-by-point, ±1ppm frequency stability and -125dBc/Hz phase noise with up to 160 built-in waveforms. It offers a precisely adjustable sample rate and low jitter (200ps). It includes 8Mpts (standard), 16Mpts (optional) memory. It also offers standard two full functional channels, built-in 8 orders harmonics generator, 7 digits/s full-function frequency counter with 200MHz bandwidth, 200MSa/s sample rate, 14bits vertical resolution and convenient arbitrary waveform editing interface.

*Scientific Mes-Technik Pvt Ltd, Indore*
*E-mail: info@scientificindia.com*
*Phone: +91-7312422330*
*Web: www.scientificindia.com*

# COMPUTING

## Motherboards

ASUS has launched two new entry-level motherboards—the H81M-K

and B85M-K. Both the motherboards use the LGA 1150 socket for 4th Gen Intel Core processors support and are based on Intel H81 and Intel B85 chipsets, respectively.

The ASUS H81M-K and B85M-K also feature ASUS exclusive technologies, such as NEW UEFI BIOS to provide full-scale performance tuning with easy BIOS settings and USB 3.0 Boost to provide up to 170 per cent faster transmission speed over regular USB 3.0. USB3.0 Boost also automatically accelerates data speeds for compatible USB 3.0 peripherals without the need for any user interaction.

The motherboards also have other ASUS exclusive features such as AI Suite 3, GPU Boost, EPU, FAN Xpert and Network iControl amongst others. All of these features are designed to provide great PC using experience.

*Asus Technology Pvt Ltd, New Delhi*
*Phone: +91-9717691313*
*E-mail: dhiraj_gupta@asus.com.tw*
*Web: www.asus.com/in*

## COMPONENTS

### Low-standby current regulator for automotives

Toshiba America Electronic Components, Inc. (TAEC) has launched its TB9021FNG device—a low-standby current, low-power, high-temperature and mission-critical 5V/200mA linear regulator supporting automotive grade 5V microcontrollers. The deployment of the TB9021FNG, with automotive grade 5V microcontrollers, provides automobile makers with reliability, power and cost benefits in the design of entertainment, information, safety and driver assistance systems for the next-generation automobiles.

*Toshiba India Pvt Ltd, Gurgaon*
*Phone: (0124) 4996600*
*Web: www.toshiba-india.com*

### Cable lugs

Klauke India has introduced cable lugs that are manufactured by annealing process to condition the material from tension and hardness and minimise the risk of fracture. This process increases durability and protects from vibration.

The cable lugs are designed according to DIN standards, and their selection depends on the cable type,


say, compression cable lugs DIN 46235, standard tubular cable lugs and sheet metal terminals DIN 46234. The cable lugs are burr free with a flat palm and a cleanly machined end, which are signs of a high-quality product.

*Klauke India, a division of Textron India Pvt Ltd, Bengaluru*
*Phone: + 91-8025530007/0186*
*E-mail: pmishra@klauke.textron.com*
*Web: www.klauke.com*

### Opamps for sensor signal amplification

ROHM has developed low-voltage, low-offset BD5291G and BD5291FVE opamps which are designed to amplify signals from motion sensors such as accelerometers and gyroscopes. Both utilise ROHM's analogue technology, enabling input/output full-swing operation at only 1.7V. In addition, a high common-mode rejection ratio results in a small signal processing accuracy that is 18 times better than what can be achieved with ordinary low-voltage operational amplifiers.

Its applications include smartphones, tablet PCs, portable CD/DVD players, handheld gaming equipment and other devices utilising motion sensors.

*ROHM Semiconductor India Pvt Ltd, New Delhi*
*Phone: (011) 41777050*
*Web: www.rohm.com*

## EFY eZine Online

It is an awesome experience to access all the editions online as eZine. We will be delighted if you also provide the DVD content online along with eZine.

Ravi Teja Sikhakolli
Through e-mail

***EFY:*** Thanks for the feedback and suggestion! We will try to implement your suggestion if found feasible by the concerned department.

## eBooks on Simple Electronics

I am a hobbyist and I find the eBooks that you offer to be very advanced. Do you have simple books containing collections of circuits or do you have any suggestion where I could buy such eBooks? I will not object to used books in good condition. Thanks in advance and also thank you for the wonderful job you guys are doing!

Ivor Cadiramen
United States

***EFY:*** We have ChipTalk and Simple Home Projects books available for beginners and hobbyists. These are available in print and eBook versions. Please check the eBooks published by EFY from the links given below:

Simple Projects: http://www.getscoop.com/?s=Simple+Project

ChipTalk: http://www.magzter.com/IN/EFY-Enterprises-Pvt-Ltd/Chip-Talk/Technology/

We also have Electronics Projects Vol. 1 through 26 available in the form of eBooks for hobbyists.

If interested, you can purchase them using the link below: http://www.aircelbookmate.com/Product/Information/V0132774D?lan=1

## Android Phone-controlled Robot

We are trying to construct 'Android Phone-controlled Robot' project published in December 2013 issue. We are using the components as mentioned in the text but using a different Bluetooth module.

Can we interchange the receive (Rx) and transmit (Tx) pins of Bluetooth module in the code? Do we really need to install both text-to-speech (TTS) and voice search apps in my Smartphone before controlling the robot? My phone got connected with the module but robot is not moving.

How can we configure the module?

Abhijeet Parida
Through e-mail

❏ I am using Samsung tablet to test the above-mentioned project. After loading the code into Arduino board from EFY DVD, Bluetooth device is connected but motor is not moving and at the same time I got 'no 516, transport end not connected' error message on my Tablet. I am not using speech command but using touchscreen to control the robot.

Ramesh K. Pandey
Navi mumbai

*The author Phani Rohit replies:*

The Bluetooth module Abhijeet bought may be HC-05 or HC-06. The default baud rate of these modules is 9600. You need to change the baud rate to 57600 using AT commands. Check the data sheet of the module for changing the baud rate. Note that to control the robot using speech command only, TTS is not required but Google's Voice Search app is required. If robot is not moving, I think it is because the baurd rate was not changed to 57600.

The baurd rate of the module should be 57600. I too tested the app in Samsung smartphone and Tablet. If you interchange the transmit (Tx) pin and receive (Rx) by mistake, you will get such error message. So check proper connections of these pins from Bluetooth to Arduino board.

## Digital Weather Station

I am a student and EFY subscriber. I would like to do 'Digital Weather Station with Data Storage System' as a college mini project. Let us know if you have any such related project published in EFY. We are even ready to purchase all components and tools from your associate, Kits'n'Spares.

Aswathy Usha Mohan
Through e-mail

***EFY:*** You may refer to 'Weather Logger' construction project published in January 2014 issue. The circuit can be used to display temperature, humidity, pressure, date/time or calendar, save data in your PC through microcontroller for future reference, etc. You may contact Kits'n'Spares for EFY back issue or complete kit of the project at e-mail: info@kitsnspares.com

## ERRATA

The article titled 'Resistor Calculator 1.0.6' in February issue of EFY Plus DVD section was written by Anagha P. and not Dilin Anand as mentioned.

## 'Spot An Error' Award Winners

❏ In the 'Simple Square Wave Generator' circuit published in February issue, the circuit symbol of capacitor C17 (1μF, 16V) in Fig. 1 is wrong. It should be electrolytic capacitor as mentioned in the parts list.

Bhaskar Pandey

❏ In the content page of January issue, the hands-on section reflects the old banners whereas this section has new banners from January onwards.

Bhaskar Pandey

❏ In the eStyle section published in February issue, specifications of Intex Aqua i5 is mistakenly mentioned as '1.2GHz quad-core MediaTek MT6589 Processor' instead of '1.2GHz quad-core MediaTek MT6589M Processor.'

Siddharth Kaul

❏ In the article 'How Secure are Your E-mails' published in February issue, the SMTP is wrongly mentioned as 'simple mail transport protocol' instead of 'simple mail transfer protocol.'

Madhuram Mishra

❏ In the article 'Fourth-Generation Free-Space Optics' under the heading 'How it works,' the detectors for the optical signals are explained in which the 'advanced photodiode' is mentioned as APD but APD is an abbreviation for 'avalanche photodiode.'

Madhuram Mishra

**Q1.** What is CAT rating with respect to multimeters? The one I am buying indicates CAT III.

Dinesh Rai
Through E-mail

**A1.** All manufacturers of handheld multimeters are required to mention on their products the rated measurement category (CAT I, CAT II, CAT III or CAT IV). This marking is a convenient way for users to identify the maximum transient voltage that the device can safely withstand. Most handheld digital multimeters (DMMs) display this rating near the voltage/current input terminals. CAT III is the one you will generally find on the multimeters but beware some cheap Chinese manufacturers write CAT III just like that because they know what users are looking for.

For example, 300V CAT II indicates that this module must not be connected to mains CAT II circuits when operated above 300V. Use the accompanied table to find out the impulse voltage level it can withstand. In this case, it will withstand impulse voltage up to 2500V.

CAT III category is applied to building circuit installations that are completely within the building, including parts of the service panel and the branch circuits. It also applies to many of the building's fixed equipment, which is connected directly to the building mains instead of being connected through cords and plugs.

**Q2.** Is hierarchical design really an important functionality for EDA tools?

Yogesh Shukla
Through E-mail

**A2.** This is a must have. When the design gets complex, it is better to represent it as a hierarchical design. This makes the representation simple, traceable and easy to navigate and review. In schematics with a lot of repetition, it can save your work. For example, if you have 16 channels of some circuitry, you can just build it once, and replicate it using hierarchy. Second, when multiple persons are working on a project, it enforces clean boundaries. Because all high-level connectivity is via ports, there is no risk of accidental connectivity via off-page connectors. We use gEDA project at EFY which supports hierarchical designs. Figure above shows a glimpse of gEDA project tool.

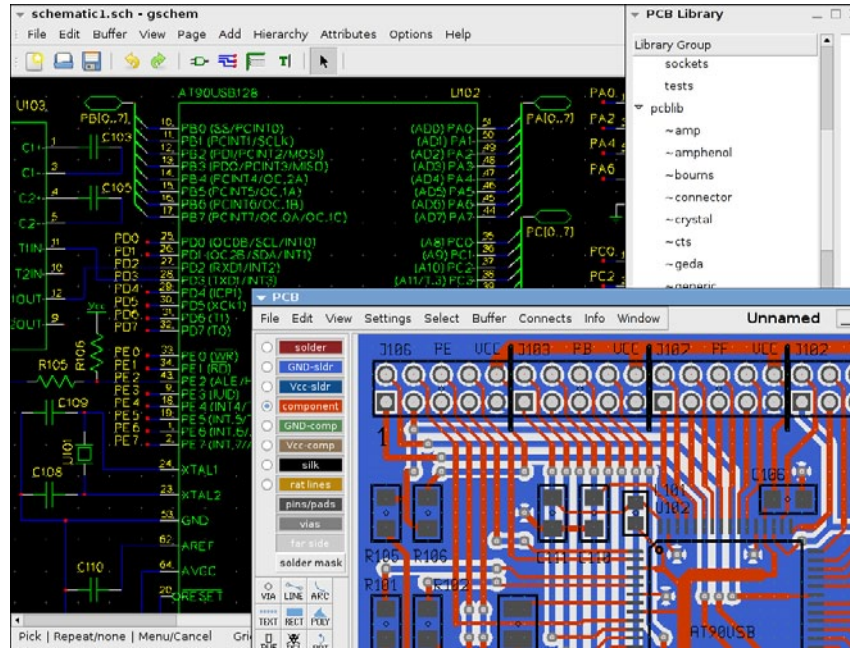

*gEDA project tool*

**CAT Ratings and Corresponding Impulse Voltage Levels**

| | CAT IV | CAT III | CAT II | CAT I |
|---|---|---|---|---|
| 150V | 4000V | 2500V | 1500V | 800V |
| 300V | 6000V | 4000V | **2500V** | 1500V |
| 600V | 8000V | 6000V | 4000V | 2500V |
| 1000V | 12,000V | 8000V | 6000V | 4000V |
| Resistance | 2-ohm | 2-ohm | 12-ohm | 30-ohm |

**Q3.** What is the difference between margin testing and verification?

Pooja Juyal
Through E-mail

**A3.** Engineers need to test their designs in order to ensure that they meet the design specifications across the full range of operation. This is known as margin testing. This is a design challenge that requires the complete setup with stimulus and the acquisition systems. With such a system, you vary all the input parameters using the stimulus and check the limits till which you get an acceptable output. This testing also identifies how much stress the device can take while still resuming its reliable operation.

Verification is required to check if a product meets a set of initial design requirements, specifications and regulations. In the development phase, verification procedures involve performing special tests on various modules and modelling the results, then performing a review or analysis of the modelled results to see if it complies with specifications. In the post-development phase, verification procedures involve regularly repeating tests devised specifically to ensure that the product continues to meet the initial design requirements, specifications and regulations as time progresses.

*Answers compiled by EFY technical editor, Ankit Gupta. Letters and questions for publication may be addressed to Editor, Electronics For You, D-87/1, Okhla Industrial Area, Phase 1, New Delhi 110020 (E-mail: editsec@efyindia.com) and should include name and address of the sender*

KENELM LOPES
PRODUCT MANAGER-DATA COMMUNICATION, TE CONNECTIVITY, INDIA

# "Over 85 per cent of the connections made in the data centres will be over fibre"

Today, both fibre and copper have made major advances in bandwidth capability. However, fibre-based technology is replacing portions of copper in embedded communication systems, and we had some questions as to why this is happening. Abhishek Mutha of EFY gets answers from Kenelm Lopes, product manager-Data Communication, TE Connectivity, India

**Q What is the most exciting technology that your Indian research and development centre is working on?**

TE Connectivity has research and development centres in India in addition to similar locations and labs across the world. In the last few years, we have developed some of the latest technologies in this space. Currently, some of our teams are working on fibre-based technology that will replace portions of copper-printed circuit boards.

**Q That sounds interesting. Could you share more details on the fibre-based technology?**

For quite some time, while copper-based infrastructure solutions were still represented, there seemed to be a lot more flaunting of fibre from cabling and connectivity manufacturers than ever before. Today, both fibre and copper have major advances in bandwidth capability. To support the next generation of LANs at 10Gbps (gigabits per second), multi-mode fibre has advanced to new levels to support laser-based systems. Although the industry does have UTP/STP cabling that will provide at least a three-fold increase in bandwidth, it faces the limitation in distance compared to that of optical fibres media.

**Q What kind of applications are we talking about here?**

Fibre-optic is the dominant type of cable for connecting separate buildings on campuses and connecting floor distributors to building distributors and data centres. Because of its high cost on the LAN equipment side, it has been limited to the backbones. If we compare the cost of a fibre port on the active equipment and that of gigabit copper port on the active equipment, the fibre is almost six times costlier.

Within DC segment, fibre-connected device ports already exceed copper-connected ports in every major global market, and within India the ratio is almost 54 per cent of fibre against 46 per cent of copper.

Some also predict that by 2014, over 85 per cent of the connections made in the data centres will be over fibre. Prime drivers are space, cost and power consumption, and for major content providers, video-on-demand services are driving an increase in the number of servers and the amount of disk storage. Reduced latency is the key to delivering the quality of service viewers seek.

**Q What are the challenges designers face to overcome while transitioning from copper to fibre?**

It is a different game. While fibre opens up a world of very high-speed and almost unlimited bandwidth, the design of fibre devices, the management of thermal profiles and EMI-related issues at the transceivers and the delicate handling of fibre-optics can pose quite a challenge.

**Q So how would replacing fibre with copper help designers, if it is so challenging to begin with?**

It is advantageous to use fibre connectivity over copper because it offers the product unmatched superior performance as far as bandwidth is concerned. Single-mode fibre has practically unlimited bandwidth. With the costs of copper shooting up, fibre connectivity solutions can sometimes be cheaper. With significant increase in volumes in the manufacture of fibre components, the prices of fibre transceivers installed in optical equipment have also dropped to very competitive levels.

**Q What are the challenges you face while designing and manufacturing products for connecting and protecting the flow of power, data and signal?**

The flow of power and signals is defined by global standards. New challenges arise when these products are

meant to operate in environments that are very different from the ones in which they were designed. For example, in an Indian environment, cable assemblies run high risk of damage from rodents and harsh UV radiation if used outdoors. This has required introducing new variants of our global product lines for the Indian market.

**Q Buying the most expensive passive components would not necessarily solve a problem. So how does a designer take a decision?**

In times where design piracy is rampant, a designer must ensure to buy a genuine product. Also, it is important to buy products that are compliant to global standards and that are rigorously tested for reliability and longevity. It is safest to stick with reputed manufacturers who can furnish mean time between failures and third-party test reports. It is no longer sufficient to go just by description or look and feel of a product. Critical requirements need to be identified early and product compliance checked. Most reputed technologies conduct trainings on technologies that go into making these products. These can be invaluable to enable the designer to make and define the right specification before it goes to the commercial teams who may not have this exposure.

**Q How does TE Connectivity help engineers tackle design challenges?**

The bottleneck to using fibre has been the relative lack of familiarity with fibre products and solutions. We try to remove this technical inertia by conducting regular seminars and educative presentations of the basics of fibre, its advantages, the products available and the trends in new product development. These are more technology rather than product focussed and target design houses, educational institutions, distributor FAEs and major customers.

**Q Anything else that you would like to share which could be of interest to the designers?**

Technologies such as 4G/LTE and triple/quadruple play services can only flourish in a fibre-based environment. Internet bandwidth requirements will continue to grow exponentially as HD video streaming, online music, social media, distributed computing and other such technologies evolve. This again remains only possible with the lack of bandwidth constraints offered by fibre.

**Q Talking about distributed antenna systems (DAS), why are they crucial to mobile operators? Are they being adopted in designing of transmission towers?**

It is impossible for each operator to introduce his antennae at regular intervals to ensure seamless coverage. The reach also depends on the size, construction and architecture of a building. Increasing transmission power would be one way but it comes with serious human health risks and transmitter limitations. For mobile operators, it is best to extend the signals using a DAS all across a building and site. ●


Statement about ownership and other particulars about

**ELECTRONICS FOR YOU**

FORM IV (See Rule 8)

| | | | |
|---|---|---|---|
| 1. | Place of publication | : | New Delhi |
| 2. | Periodicity of its publication | : | Monthly |
| 3. | Printer's Name | : | Ramesh Chopra |
| | Nationality | : | Indian |
| | Address | : | ELECTRONICS FOR YOU<br>D-87/1, Okhla Industrial Area,<br>Phase-1, New Delhi 110020 |
| 4. | Publisher's Name<br>Nationality<br>and address | : | Same as (3) above |
| 5. | Names and addresses of individuals who own the newspaper & partners or shareholders holding more than 1% of the total capital | : | **EFY Enterprises Pvt Ltd**<br>D-87/1, Okhla Industrial Area,<br>Phase-1, New Delhi 110020 |

I, Ramesh Chopra, hereby declare that the particulars given above are true to the best of my knowledge and belief.

Date: 28-2-2014

Ramesh Chopra
Publisher

# Lightronics

## Component solution for LED lighting (KIT FORMAT )


### SPECIFICATION: Tube Lights

- Operating Frequency : 50-60Hz
- Efficiency : >95%
- Power Factor : >0.9
- CCT : 2700K - 6500K
- Beam Angle - 180 deg
- Surface Temp: +42 deg
- Operating Temp : -35-55 deg
- CRI:>75-72Ra
- Service life:>50000 hrs

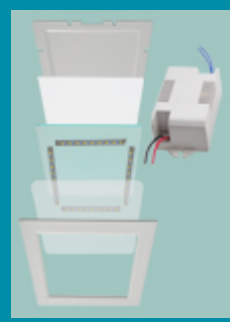


### SPECIFICATION: Panel Lights

- Wide range of led Panel light in Square and round (4w to 22w)
- More than 85% Eff and PFC of 0.92
- Aluminium die cast body with Metal core PCB.
- 5630 HELIO LED, Taiwan (65lm @150mA), CRI >75
- CCT Available: 2700K ~ 7000K
- Driver warranty 2 yrs

### SPECIFICATION: Bulbs

- Operating freq. : 50~60 Hz
- Input voltage : 95v to 270v AC
- LED : 2835
- CCT : 6500K
- Body material : ABS/PC
- BASE : E27/B22

**3535**

R G B
A IR
WW NW W

**5050**

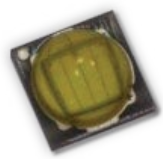

WW NW CW

**9090**

WW NW CW

**1 watt/3 watt**

RGB
R G B
A IR UV
WW NW W

**5630**

WW NW W

HELIO

**Helio Optoelectronics Corp.**

TAIWAN

RANGE OF COLOURS AVAILABLE

| | | | |
|---|---|---|---|
| WW | Warm White | R | Red |
| NW | Neutral White | G | Green |
| W | White | B | Blue |
| CW | Cool White | RGB | 3 in 1 (RGB) |
| IR | Infra Red | A | Amber |
| UV | Ultra Voilet | | |

**COB**

★ 5 watt ★ 7 watt
★ 9 watt ★ 13 watt
★ 17 watt ★ 30 watt

* Authorized Distributors

OFFICE No : 4, Raja Ram Residency
Nr.Santoshi Mata Mandir - Atul Tower,
Off. M. G. Road., Kandivali (West),
Mumbai 400 067

Mob. - +91 99207 98848 / 90049 37902
Tel. - +91 22 2801 8849
+91 86555 00031 / 32
Email - sales@lightronics.in

Lightronics
LED Lighting Solution

### Resistors
- Hi Tech Resistors
- Keltron
- ROHM
- Vishay Components
- Watts Electronics

### Capacitors
- AVX
- Epcos
- Keltron
- Panasonic
- Vishay Components

### Diodes & Transistors
- Fairchild Semiconductors
- International Rectifier
- NXP
- Vishay Components

### Switches & Relays
- OEN
- Omron
- Panasonic
- PLA
- TE Connectivity

### Educational Kits & Trainers
- Arduino
- Robokits
- Scientech
- Vegakit
- Vi Microsystems

### EDA Tools
- Altium
- Cadence
- Eagle
- Mentor Graphics
- Synopsys

### Solar Cells
- CEL
- Indosolar
- Moser Baer
- Sharp Solar

### Sensors, Transducers & Actuators
- Freescale
- Honeywell
- Omron
- PIC

### Soldering & Desoldering Stations
- Goot
- Hakko
- Max Technology
- Oki
- Weller

### Multimeters
- Agilent
- Fluke
- Meco
- Rishabh Instruments
- Scientific Mes-Technik

### Oscilloscopes
- Agilent
- Aplab
- Scientech
- Scientific Mes-Technik
- Tektronix

### Inverters
- APC
- Luminous
- Microtek
- Numeric
- Su-Kam

### SMF Batteries
- Amaron
- Exide
- Luminous
- Okaya
- Panasonic

### Microcontrollers
- Atmel
- Microchip
- NXP
- STMicroelectronics
- Texas Instruments

### UPS (Uninterruptable Power Supply Systems)
- APC
- Luminous
- Microtek
- Numeric (now Swelect)
- Su-Kam

### EPABX & Key Telephones
- Accord
- Crystal
- Matrix
- Panasonic
- Siemens

### Solar Panels/Modules
- BHEL
- Evergreen Solar Systems
- Moser Baer
- Surana Ventures
- Tata Power Solar

### Connectors for Electronics Applications
- Amphenol
- Molex
- OEN FCI
- Phoenix Contact
- Toyo

### CCTV Cameras
- Bosch
- Hikvision
- Panasonic
- Samsung
- Sparsh

### LED Driver ICs
- Infineon
- Microchip
- RECOM
- STMicroelectronics
- Texas Instruments

### Pick & Place Machines (SMT Equipment)
- Assembleon
- Fuji
- Juki
- Panasonic
- Siplace

### Programmable Logic Controllers (PLCs)
- ABB
- Allen-Bradley
- Delta
- Mitsubishi
- Siemens

### LEDs
- Osram
- Philips Lumileds
- Cree
- Kwality
- Samsung

### Electronics Training Institutions
- C-DAC
- Jetking
- Robosapiens

### EMS Organisations
- Avalon Technologies
- Flextronics
- Jabil
- Kaynes Technology
- SGS Tekniks

### PCB (Printed Circuit Board)
- Ascent Circuits
- AT&S
- PCB Power
- Shogini

**ALERT: This list is the result of our first round of analysis of votes. Some changes may occur after the second round of analysis, which will be done in consultation with the members of our Jury.**

*Top brands in each category have been listed in alphabetical order

# ADVERTISERS' PRODUCT CATEGORY INDEX



## EFY Magazine Attractions During 2014

| MONTH | TECHNOLOGY FOCUS | EFY REPORT | BUYERS' GUIDE | T&M |
|---|---|---|---|---|
| January | Electronics of Things | Industrial Automation Electronics | Rework Stations | Automated Test Equipment (AOI, etc) |
| February | Smart Grid | Smart Grid Electronics | Handheld T&M Equipment for Field Engineers | Thermal Imaging |
| March | Smart & Electric Vehicles | Automotive Electronics | How to Make Your Lab Static Proof | Function & Signal Generators |
| April | Smart Homes | Inverters & UPS–SOHO & Industrial | Digital Multimeters | Multimeters |
| May | FPGA (Programmable Chips) | Connectors & Terminals | FPGA Training Kits | Data Acquisition Systems |
| June | 3-D Printers | Certification & Quality Labs | Desktop Manufacturing Equipment (SMT, Reflow Ovens, 3D Printers) | EMC Test Equipment |
| July | Raspberry Pi | PCB Industry in India: Suppliers & Manufacturers | Budget Friendly Oscilloscopes | Oscilloscopes |
| August | Security 2.0: Latest products | Aerospace & Defence Electronics | Wi-fi & RF Modules | Incircuit Test Systems |
| September | Smart Robos | Solar Electronics | EDA Tools for Circuit Design | Virtual Instruments |
| October | Open Source Electronics | Educational & Training Products | Development Boards (Microcontroller based) | Analysers (Network, Protocol, Spectrum, etc) |
| November | Wireless Communication Technologies (Zigbee, RF to 5G & beyond) | Security & Surveillance | Soldering / Desoldering Stations | RF Devices (Wireless Devices) |
| December | Smart Lighting | LED Lighting | Programmable Power Source | Power Analysers/Power Meters/Supplies |

# ADVERTISERS' INDEX



**Page numbers subject to final dummy corrections**

# ORGANISATIONS COVERED IN THIS ISSUE

# Total Test and Measurement Solutions

Becoming the highest customer value TMI products and services provider in the global market is the vision of GW Instek and this vision, in the meantime, has always been the managerial objective ever since the establishment of the company. Over the span of nearly four decades' continuous refinement and progression, GW Instek began as a manufacturer of the earliest models of analog power supply and has rapidly expanded to provide users of nowadays with more than 300 products consisting of 500 MHz Digital **Oscilloscope** , 3 GHz **Spectrum Analyzer** , 80 MHz Arbitrary Waveform/25 MHz Function Waveform **Signal Source** , High-power Programmable Switching D.C. **Power Supply** , 1 kW/3 kW A.C. Power Supply, D.C. **Electronic Load** , 6 1/2 digit dual measurement **Multi-Meter** , 10 MHz high frequency **LCR Meter** , 500VA/200VA all-in-one electronic **Safety Tester** , etc. so as to not only fully satisfy users' demands in the process of product development, verification, production, test and quality assurance, but also meet comprehensive and complete equipment requirements for a wide extent of tests.

Warranty · Wide Selections · Worthiness · Worldwide Sales & Service

**For more details, please contact your nearest distributor or you may directly write to India_marketing@goodwill.com.tw**

**Bangalore & Pune :** Integrated Services & Consultancy, +91-9845070872, sales@isc4esaindia.com
**Chennai :** Vamara Techware, +91 9894388839, sales@vamara.in
**Hyderabad :** GSAS Micro Systems, +91-9704414410, satya@gsasindia.com
**Kolkata :** Arihant Trading Company, +91-9830033381, gautamg1966@gmail.com
**Mumbai :** Automate Process Control, +91-9223508308, automatemumbai@gmail.com
**Delhi :** Avante Global Services Pvt Ltd, 011-26473068, pkg@avante.in ;
SRB Instruments Pvt. Ltd, 9810190551, info@srbinstruments.com
**Thiruvananthapuram :** Innovative Instruments Inc, 0471-2316385, instrument_inc@vsnl.net

GW INSTEK
Simply Reliable

GOOD WILL INSTRUMENT CO., LTD.
www.gwinstek.com

# Unrivaled Performance, Flexibility, and Value for Automated Test


NI PXI hardware, combined with NI LabVIEW system design software, delivers increased performance, flexibility, and value. Using this combination of modular hardware and productive software, engineers have dramatically reduced costs, realized faster test execution, improved throughput, and increased scalability. With more than 500 PXI products, over 200 global locations, and 700+ Alliance Partners, NI offers the only complete solution for your ever-changing automated test needs.

LabVIEW helps you program the way you think–graphically–while simplifying your approach with built-in analysis and unmatched hardware integration.

**>> Accelerate your productivity at ni.com/automated-test-platform**

NI Systems (India) Private Limited
Bangalore: 080-41190000 | Delhi: 011-42658282
Email: ni.india@ni.com

NATIONAL INSTRUMENTS™

RNI No. 17587/69, Mailed on 1st/2nd of same month Delhi Postal Regd. No.DL(S)-01/3097/2012-14
Published on 29th of advance month Licenced to Post without Pre-Payment Licence No.U(SE)-08/2012-14

# 6 Instruments. 1 Scope. Infinite Versatility.


**The 6-in-1 MDO3000 Mixed Domain Oscilloscope with a spectrum analyzer. Starting at $3,610.***

Designs have evolved, integrating analog, digital and RF technologies. Now, it's the oscilloscope's turn. Introducing the MDO3000 Mixed Domain Oscilloscope. Featuring a spectrum analyzer, function generator and more, it's the only scope that comes with the instruments you use most, built-in. It's also upgradeable, enabling you to add instruments and increase bandwidth as your needs grow. So you get unlimited versatility at a starting price that's anything but limiting.

## 6 Advanced Instruments Built In

- **Oscilloscope:** 100 MHz-1 GHz models, 2 or 4 channels, 5 GS/s sample rate, 10 Mpoint record length
- **Spectrum Analyzer:** 9 kHz-3 GHz with 3 GHz wide capture bandwidth
- **Logic Analyzer:** 16 channels, 121 ps timing resolution
- **Arbitrary/Function Generator:** 50 MHz, 13 standard plus arbitrary waveforms
- **Protocol Analyzer:** Serial data trigger, decode and analysis
- **Digital Voltmeter:** 4-digits resolution

**For more details : www.tek.com\mdo3000**

For more information, please call our sales channel partner in the city nearest to you. **Ahmedabad :** Optimized Solutions Pvt. Ltd. (91-79) 30080808 / 26589008; **Bangalore:** Aarjay International (91-80) 43409200, Convergent Technologies (91-80) 23490111 / 179; **Chennai :** Aarjay (91-44) 40509200; **Andhra Pradesh / Orissa :** Peridot Technologies (91-40) 23405855; **Indore :** Optimized Solutions Pvt. Ltd. (91) 9909979950; **Kerala :** Convergent Technologies (91-471) 2462412 / 386; **Kolkata :** Techno Scientific : (91-33) 32948567; **Mumbai :** Vitronics India (91-22) 28506037; **New Delhi :** S.P.I. Engineers Pvt. Ltd. (91) 9810157421; Convergent Technologies (91-11) 42481121 / 1131; **Pune :** Cyronics Instruments Pvt. Ltd. (91-20) 24208200.

Enquires Email To : india.mktg@tek.com

Tektronix®

*Starting price includes an oscilloscope, spectrum analyzer and digital voltmeter. Other instruments and bandwidth may be added for additional cost.